ROKR

Mechanical Models

Strolling in the Sunshine

LKS01 Play with Sound & Light



Assembly Instructions

Scan the QR code or go to Community.robotime.com to discover DIY ideas, quick tips & WIN free kits

WARNING:

•This product is powered by USB connection and does not contain Type-C power cord, which must be provided by yourself (Input: 5V ⎓ 1A).
•Not suitable for children under 3 years old.
•The product shall only be used with a transformer for product or a power supply for it.
•The product shall be used with the power supply supplied, if the transformer is supplied with the product.
•The transformer or power supply is not a toy or model.
•Misuse of transformer can cause electrical shock.
•The power supply used with the electric toy shall be regularly examined for damage to the supply cord, plug, enclosure or other parts, and in the event of damage, it shall not be used until the damage has been repaired.
•Do not connect the wire to output socket.
•The product is not to be connected to more than the recommended number of power supplies.
•If the product contains motor, motor may be a hot component. Do not touch it to avoid burns while operating.
•This product is only to be connected to equipment bearing either of the following symbols: ⧈ or ⧈
•This product does not need liquid cleaning, and please clean the product with clean soft cloth.
•The instruction must be retained since it contains important information.

NOTICE:

•Children should be accompanied by adults while assembling.
•The product contains small parts and electronic components. Adults should guide and supervise children in the correct use of the product to prevent ingestion or choking.
•Please read the instructions carefully before assembly to confirm that the parts are not damaged or missing.
•This product needs to be made with some auxiliary tools. Please select it reasonably to avoid injury.
•Please carefully cut the parts and make sure they are firmly pasted when using glue or tape.
•Please install the electronic components correctly and test whether the circuit is normal after completion.
•Please don't clean this product with chemical cleaners: alcohol, ammonia water, glass cleaner, etc.
•Please clean the product with clean soft cloth, and sand the board burr lightly with sandpaper.
•Please keep the product away from flammable substances and humid environments to prevent damage.

Icon Illustration

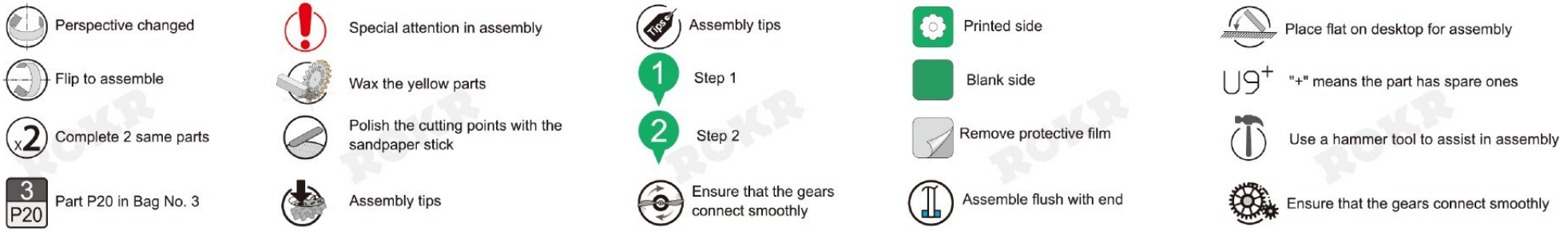

FAQs:

Problem	Reason	Solution
1. How to solve the fracture of parts?	1. Parts are fragile and applied with too much force. 2. Some parts are marked with pressure application point. Do not press non-pressure application point or at the end of the long pieces.	1. Take off the pieces carefully. 2. Some fragile pieces have spare ones to replace. 3. Contact our customer service for free replacement parts. 4. Adhesive can be used if the decorative part (non-drive function part) breaks.
2. It's hard to assemble parts. What should I do?	1. Some transmission parts may fit tightly, and tools can be used to assist in pressing.	1. Check for assembling errors. 2. Press with the tool.

Part list (Tips: suggest to put the parts in a box to prevent loss.)

Bag No.1

Item	M1.4 Gold screw	M2 Black screw	M2 Gold screw	M3 Screw	M1.4 Silver screw	Round head rivet	Round head rivet	Hinge	Corner bracket	Phillips screwdriver	Double-sided adhesive dot	Shaft sleeve
Item number	P1	P2	P3	P4	P5	P6	P7	P8	P9	P10	P11	P12
Illustration	 M1.4X6	 M2X5	 M2X11	 M3X6	M1.4X5	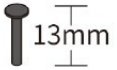 13mm	 18mm					
Quantity	7	9	6	5	6	1	1	2	2	1	1	2

Bag No.1 **Bag No.2** **Bag No.3**

Item	Synchron-ous belt	Sakura hairpin	Small light panel	Touch switch	Flexible light board & Touch switch	Main control board	Front track	Rear track	Bottom plate	Horn	Back adhesive foam
Item number	P13	P14	P15	P16	P17	P18	P19	P20	P21	P22	P23
Illustration				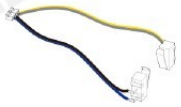		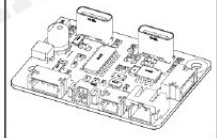		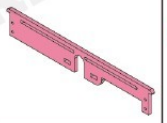	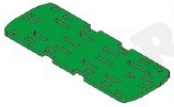		
Quantity	1	1	1	1	1	1	1	1	1	1	2

Item	Wax block	Sandpaper stick	Blue-white wire motor	Red-black wire motor	Curtain	PET transparent sheet	PET wire	PET patterned transparent sheet	Z-board injection molded parts
Item number	P24	P25	P26	P27	P28	P29	P30	P31	P32
Illustration	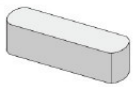					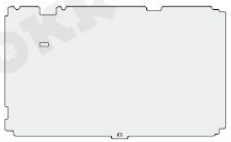			
Quantity	1	1	1	1	1	1	2	1	1

1. Function test

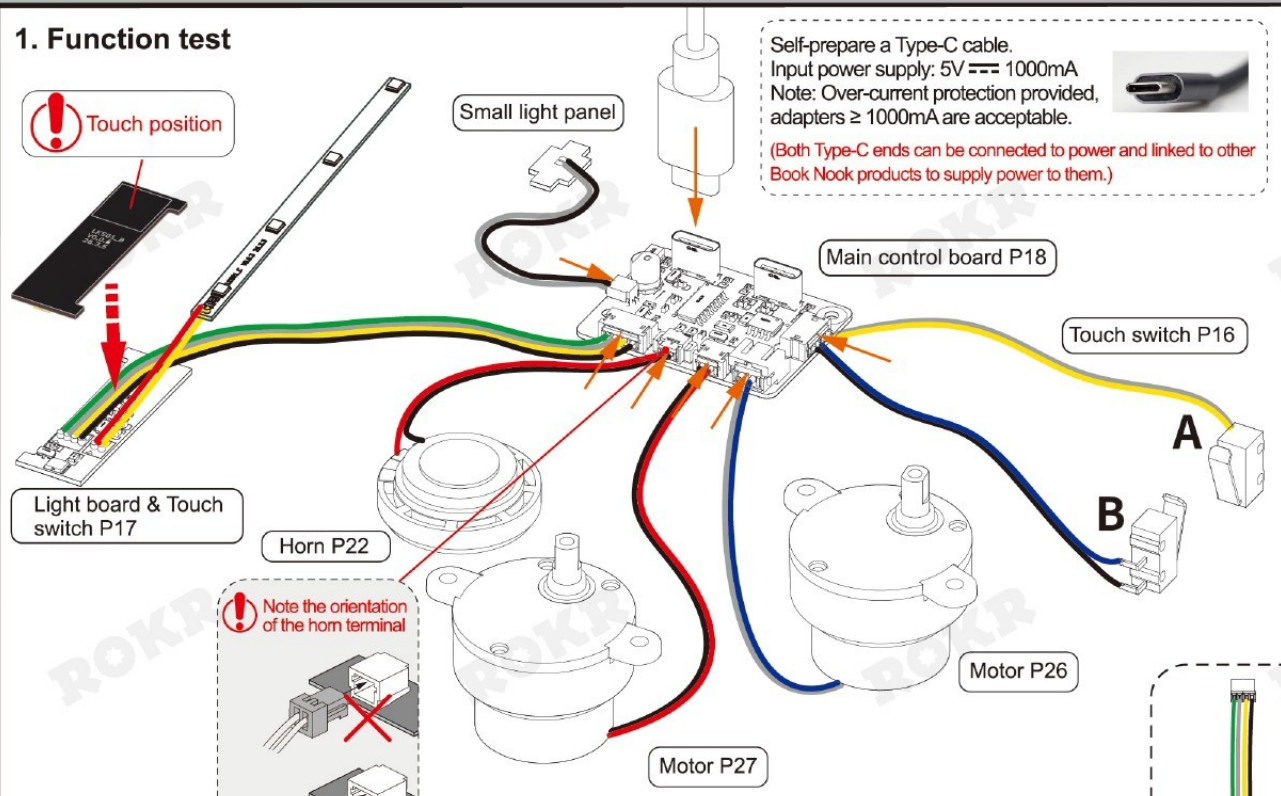

Self-prepare a Type-C cable.
Input power supply: 5V ⎓ 1000mA
Note: Over-current protection provided, adapters ≥ 1000mA are acceptable.

(Both Type-C ends can be connected to power and linked to other Book Nook products to supply power to them.)

Power on Test 1(Electronic parts must be removed after the test)

Program Operation Results:
1. Connect power supply.
2. Click on the P17 **touch switch** on the light board, the motor starts, the horn music plays, and the light board lights up.
3. Click the P17 touch switch on the light board again, the horn music stops, and other components work normally.
4. Long press the touch switch, all components stop working

(If the switch is accidentally touched, it can be powered on again for testing)

2. Remove electronic components

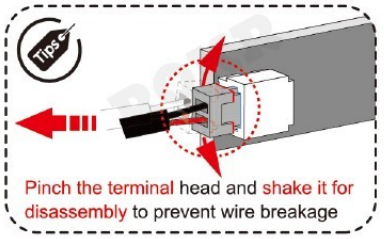

Pinch the terminal head and shake it for disassembly to prevent wire breakage

3. Organize electronic components and store them in a storage box.



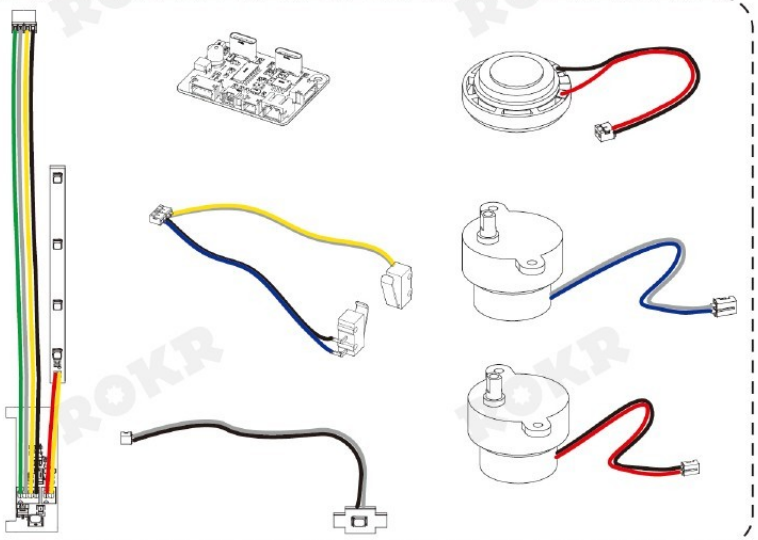

1

- A1 x2
- A2
- A3 x6
- A4
- A6

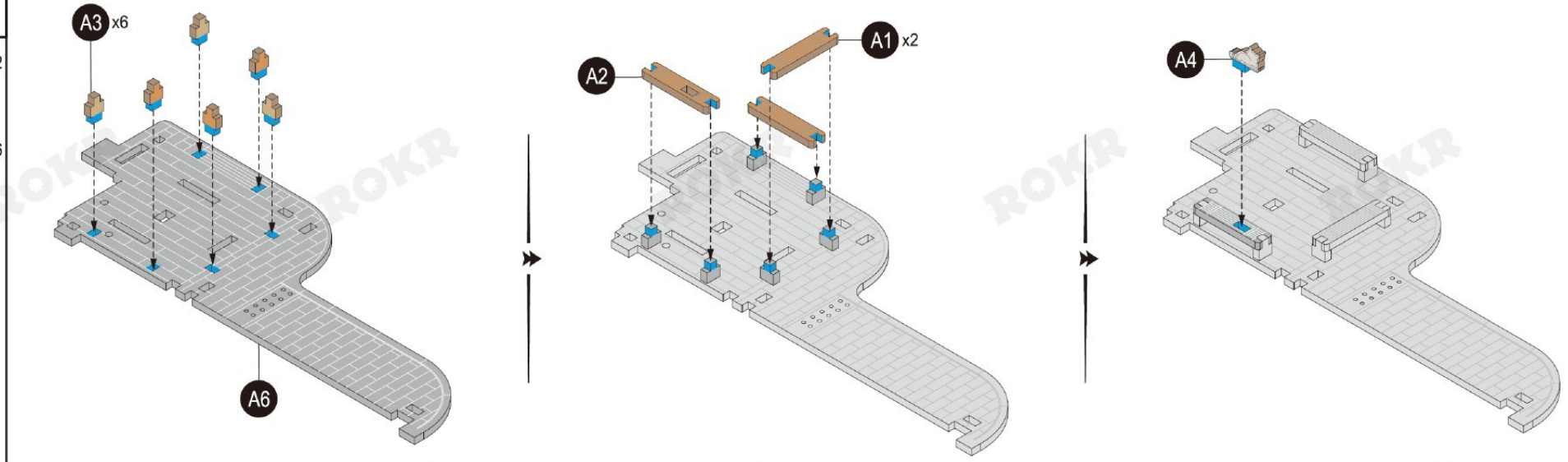

- A7
- A8
- A9
- A10
- A11
- A12 x2
- A13
- D1 x2

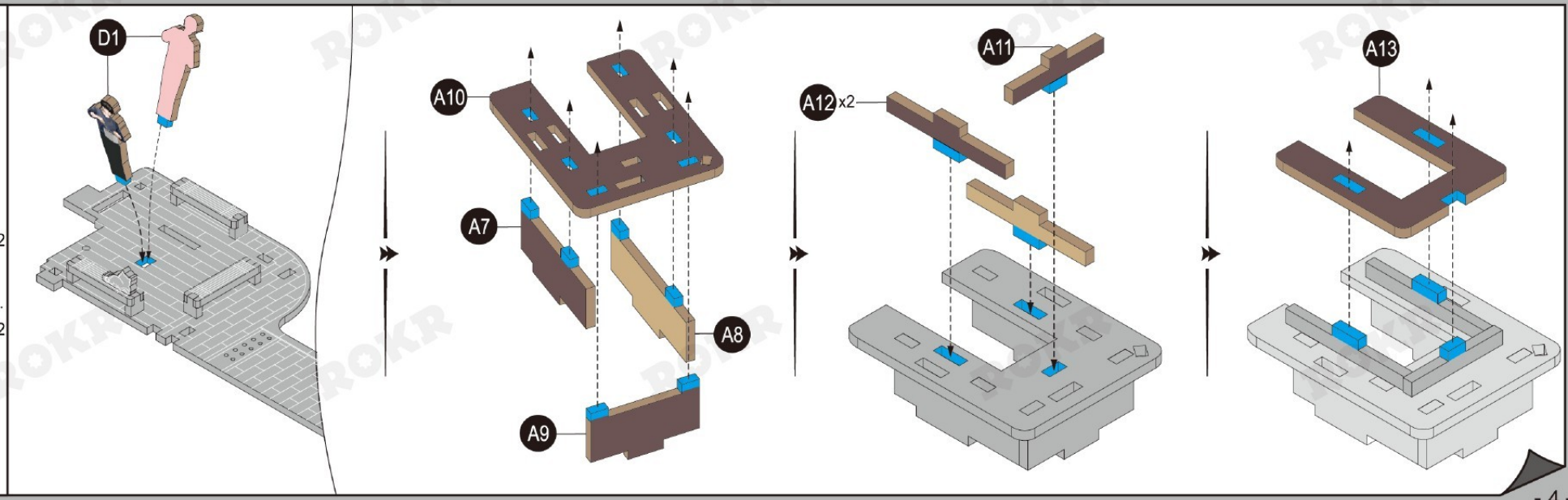

ROKR

B23

D3 x3

E23 x2

2 P15

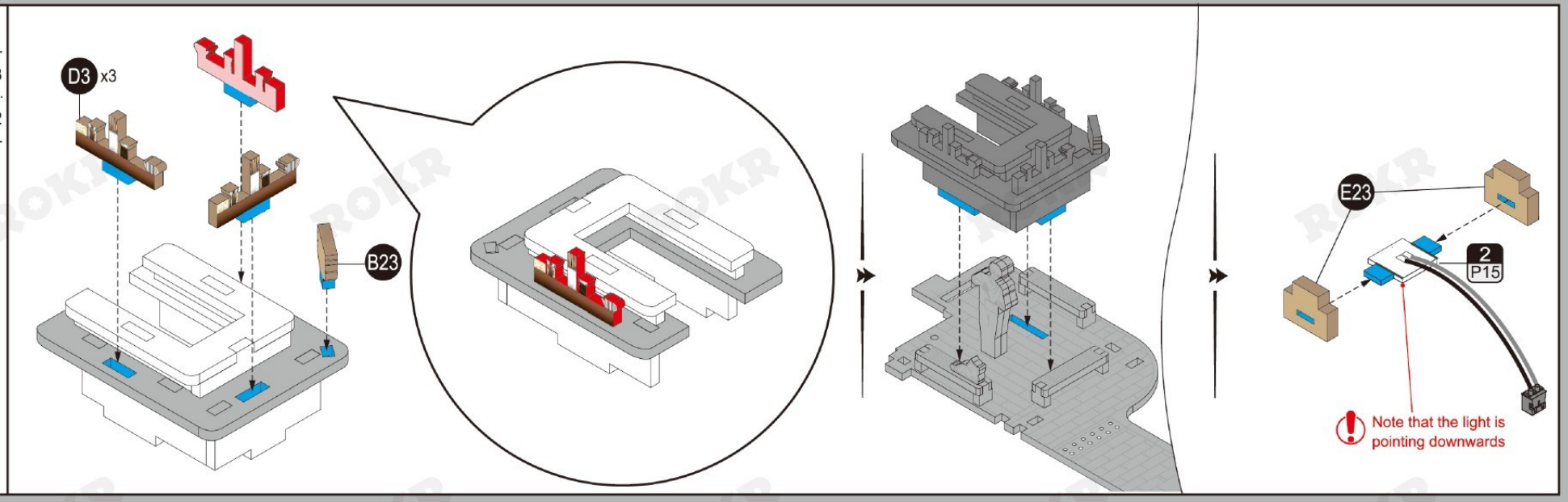

D24

D25

E3

E5

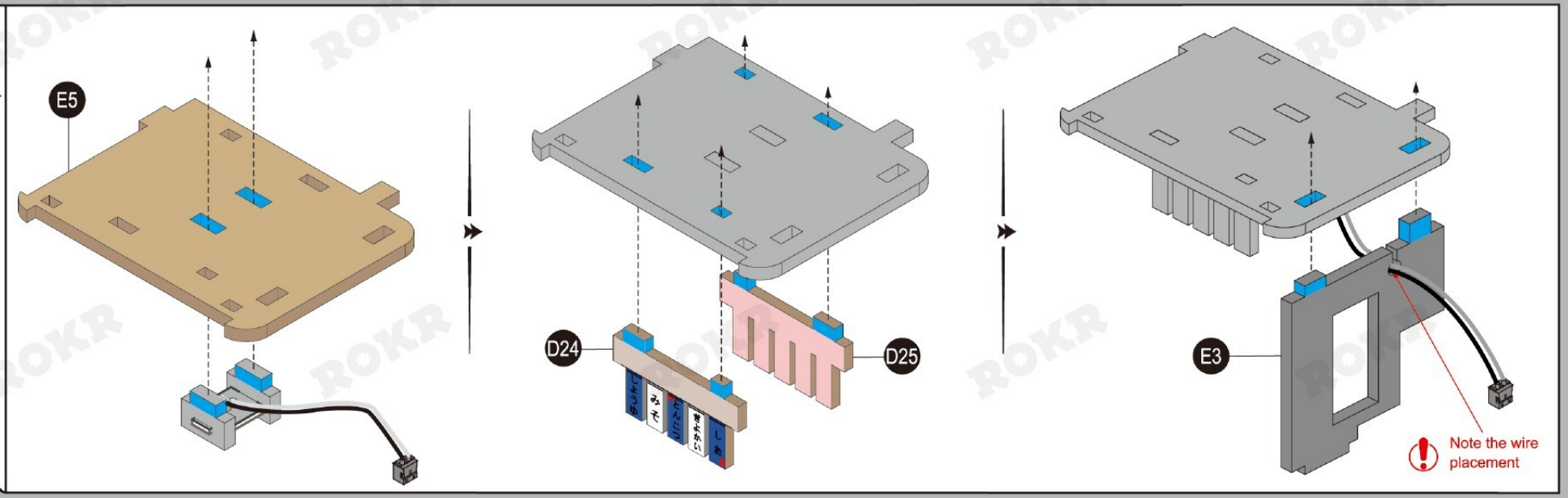

A15
D2
D4

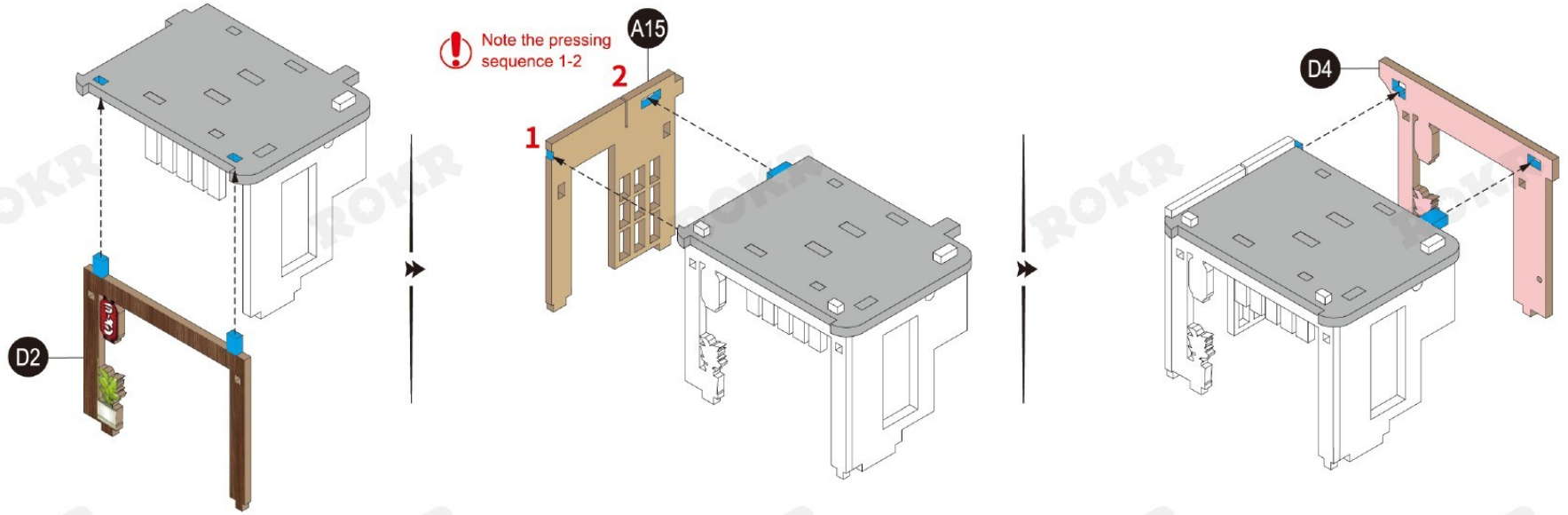

A5 x2
A17
D5

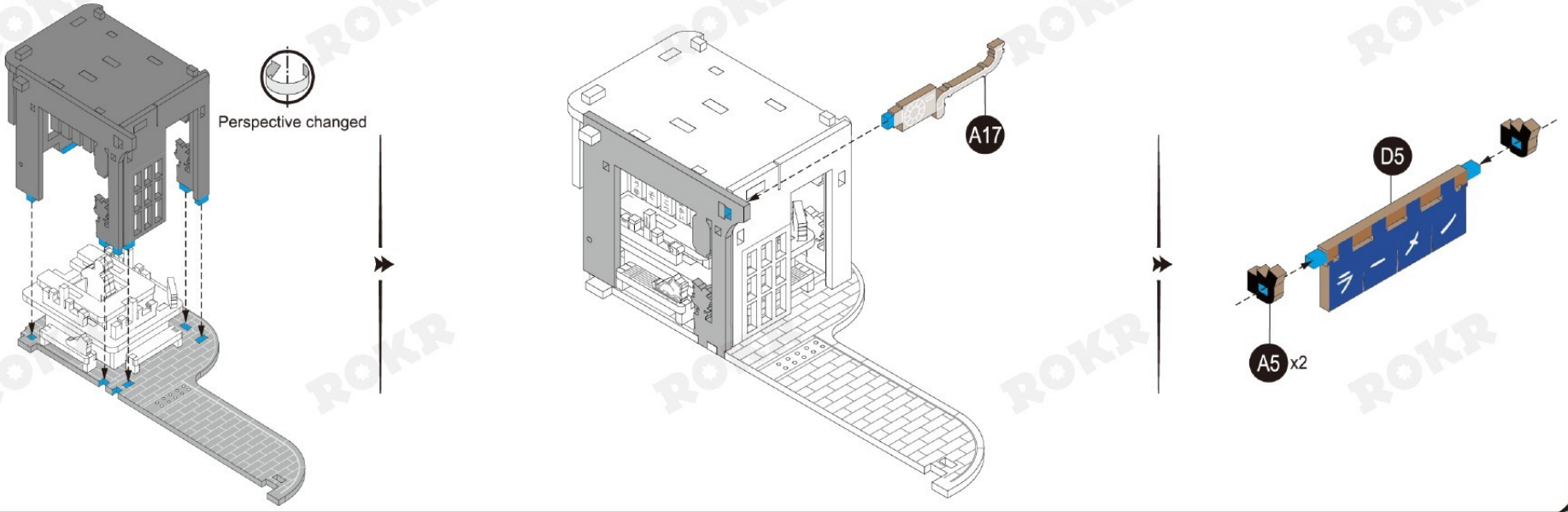

ROKR

A18
A19
A20 x2
A21

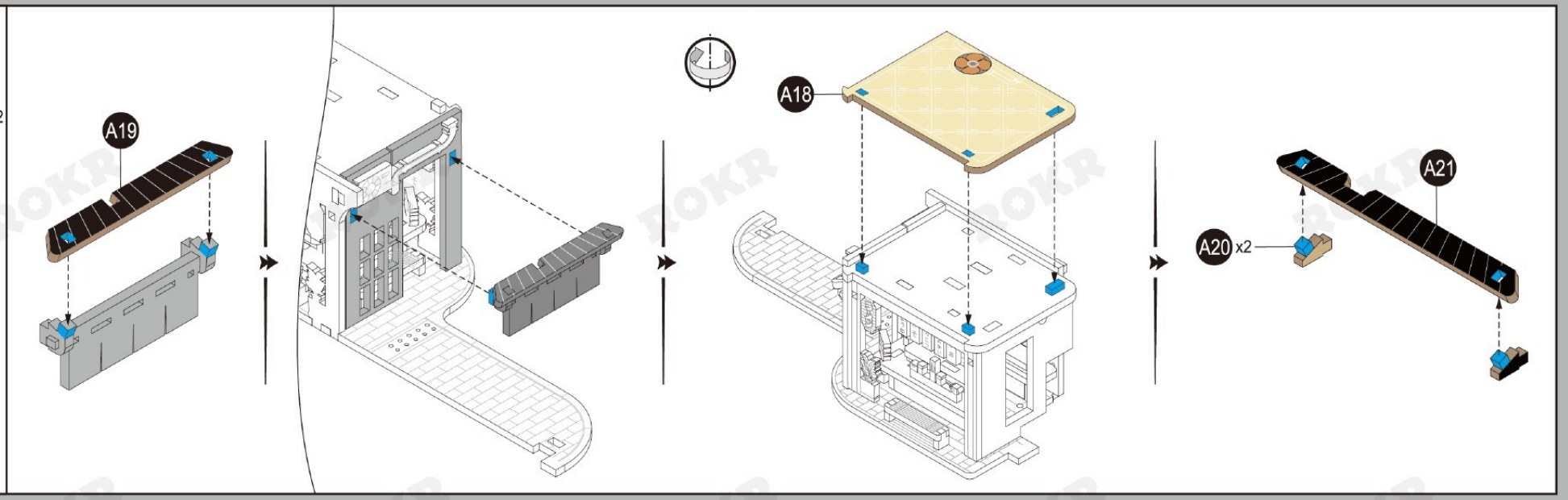

D6
G4

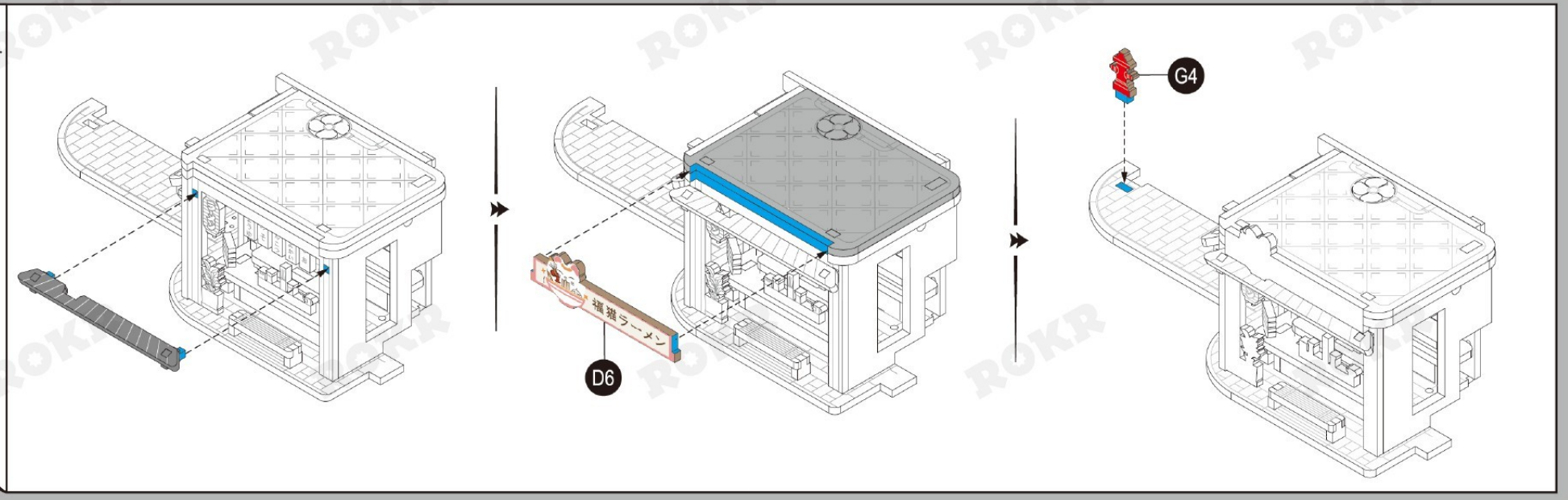

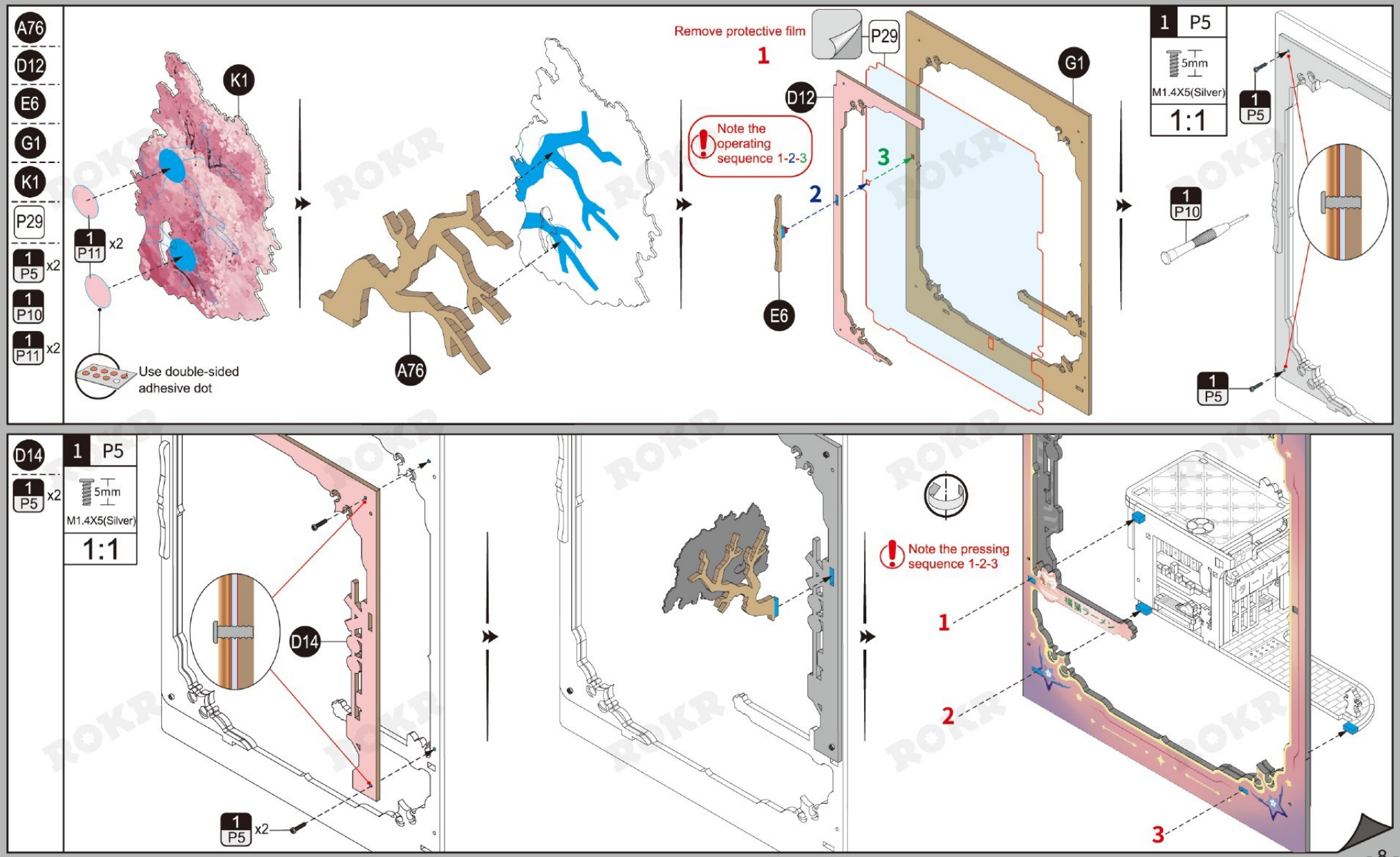
A76
D12
E6
G1
K1
P29
1 P5 x2
1 P10
1 P11 x2
1 P11 x2
Use double-sided adhesive dot
K1
A76
Remove protective film
1
P29
G1
D12
Note the operating sequence 1-2-3
2
3
E6
1 P5
5mm
M1.4X5(Silver)
1:1
1 P5
1 P10
1 P5
D14
1 P5 x2
1 P5
5mm
M1.4X5(Silver)
1:1
D14
1 P5 x2
Note the pressing sequence 1-2-3
1
2
3

A14 x2
A16

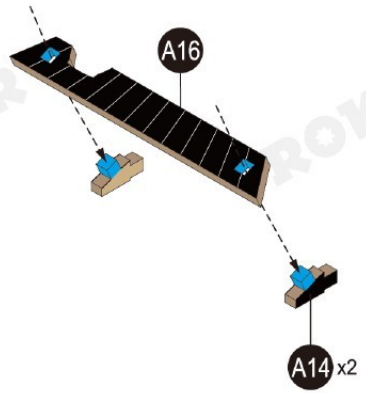

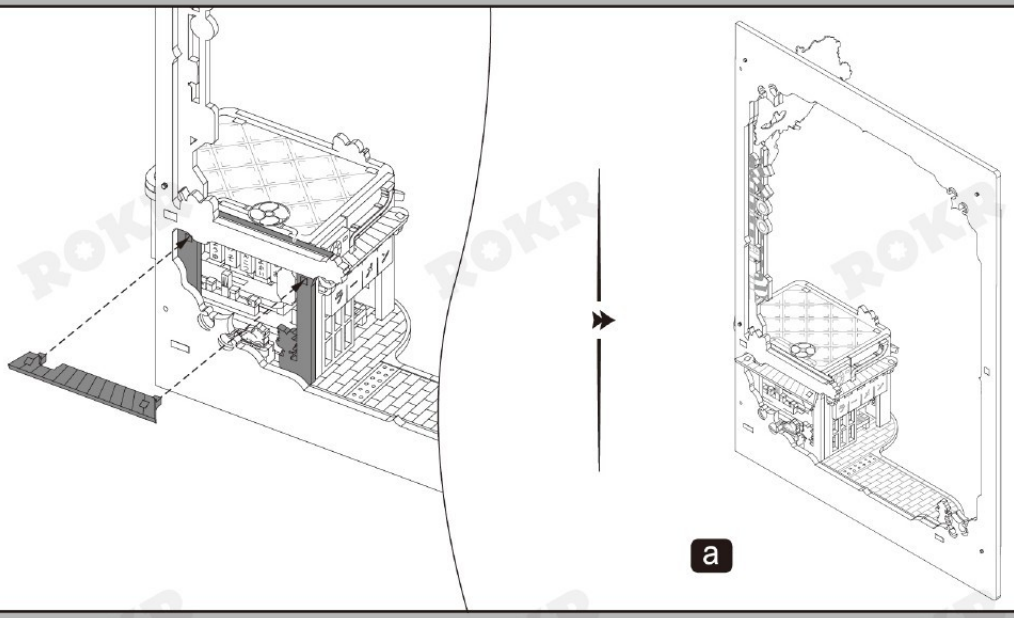

a

2

A23 A25 A28 E19 E20 E25 F1 J18

J19 J22 P24 1 P2

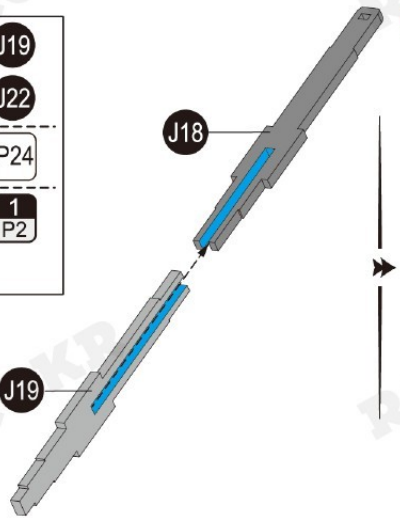

Wax and polish the yellow parts or they will not connect smoothly

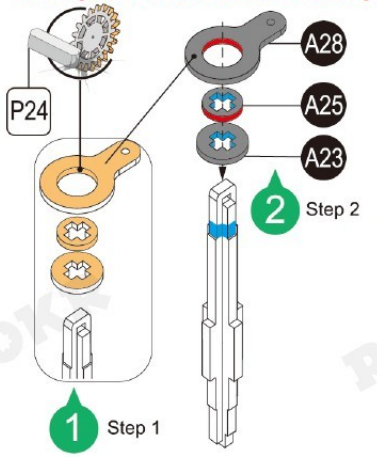

Wax and polish the yellow parts or they will not connect smoothly

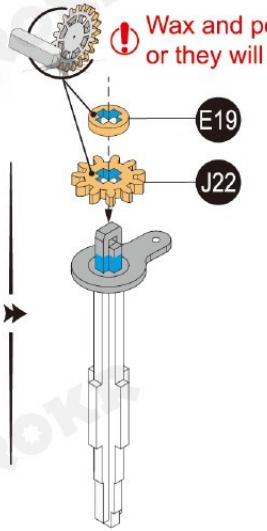

1 P2

5mm

M2X5

1:1

Note to remove E26 and place it in the storage box

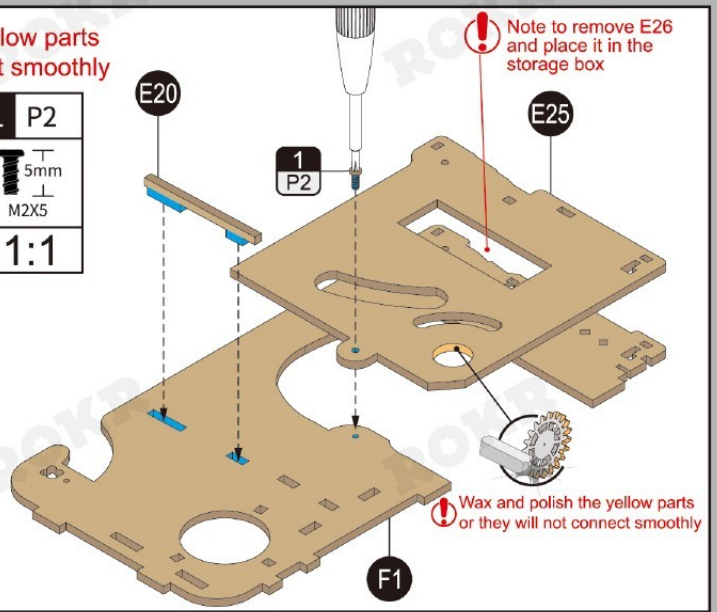

Wax and polish the yellow parts or they will not connect smoothly

A25
A28
A29
A30

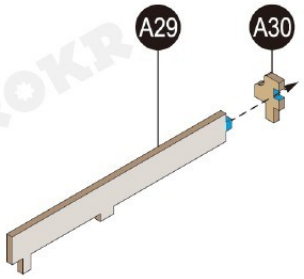

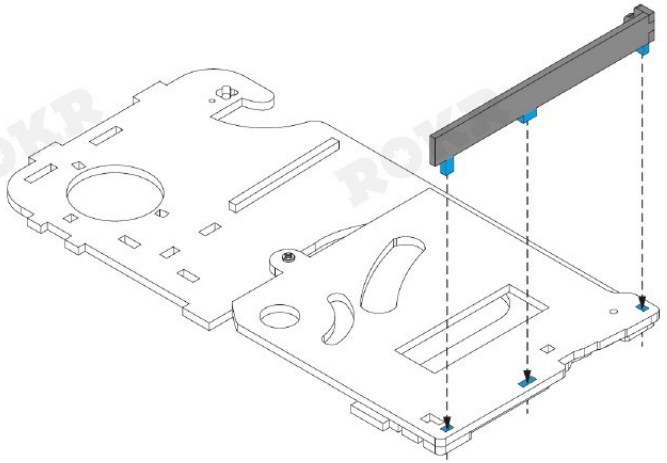

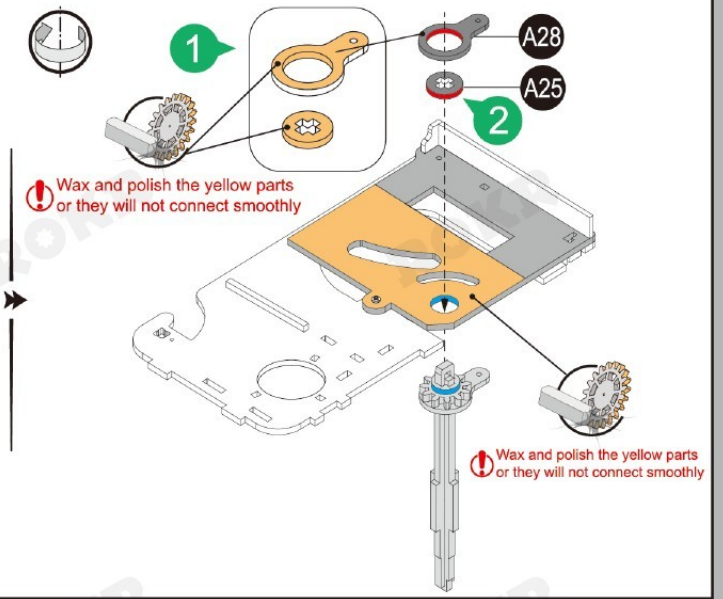

A26 x2
A27
A32
A33
J25

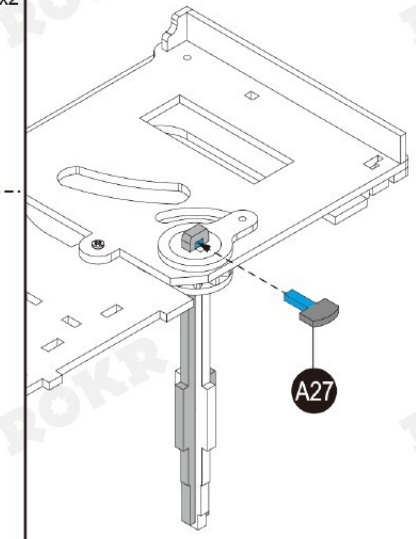

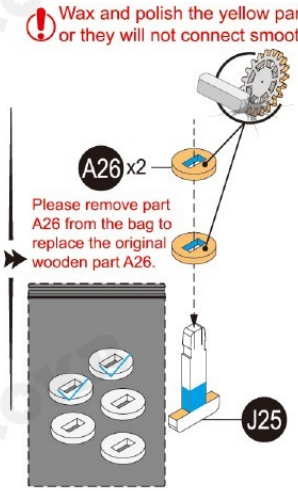

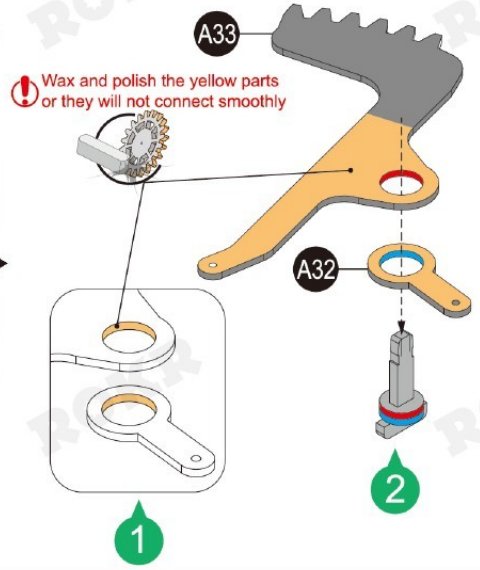

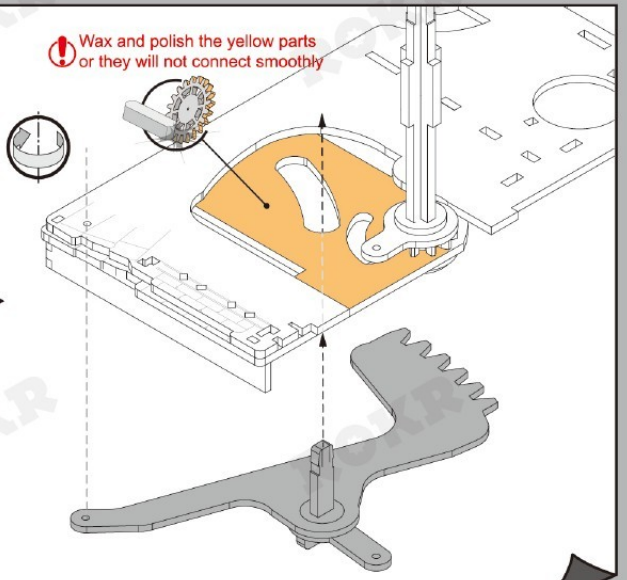

A26
A31
A32
J20

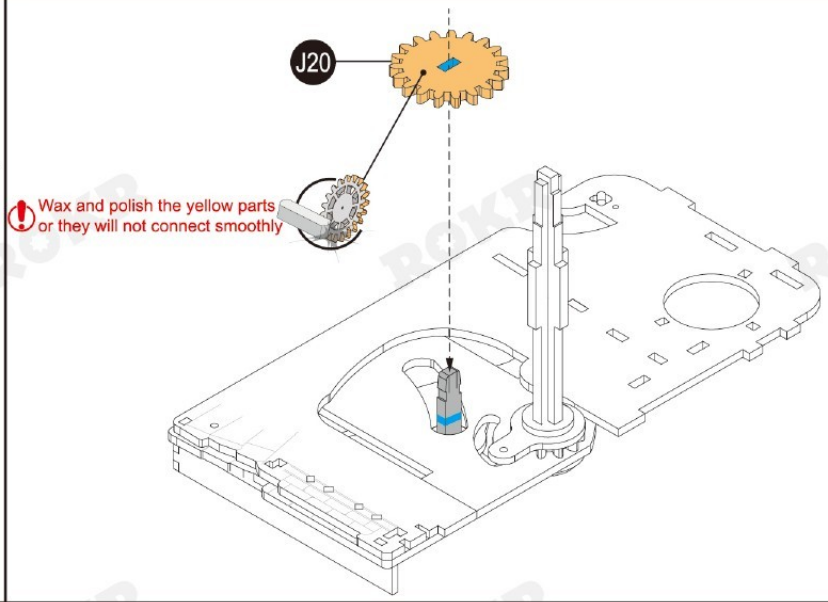

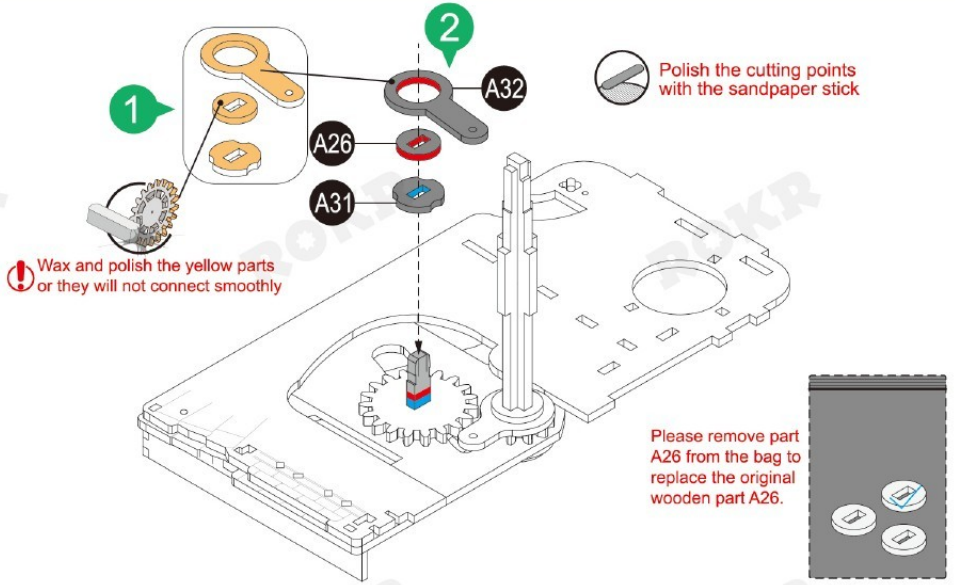

B1
D8
D9
D10
D11
G14
J21
1 P7
1 P12

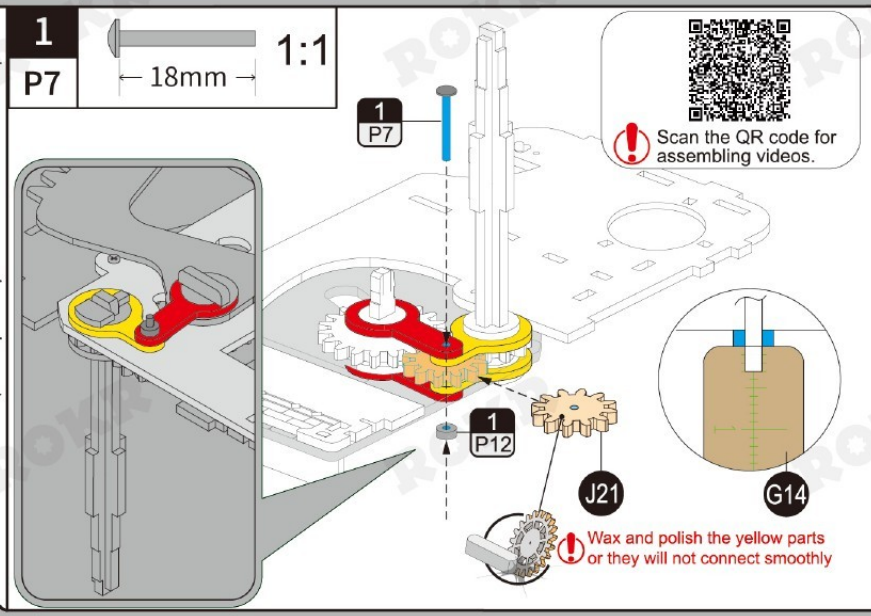

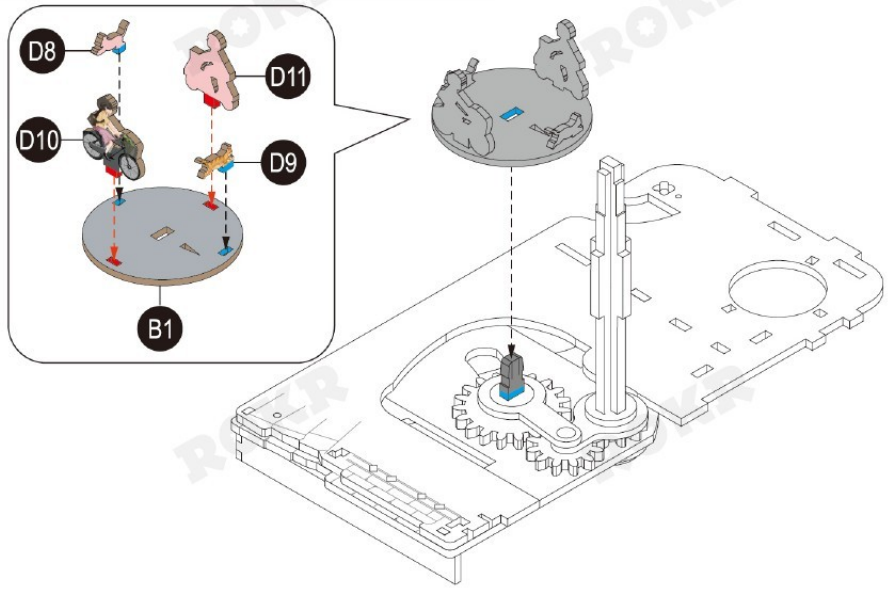

A26
A34 x2
A35 x2
A36 x2
J30

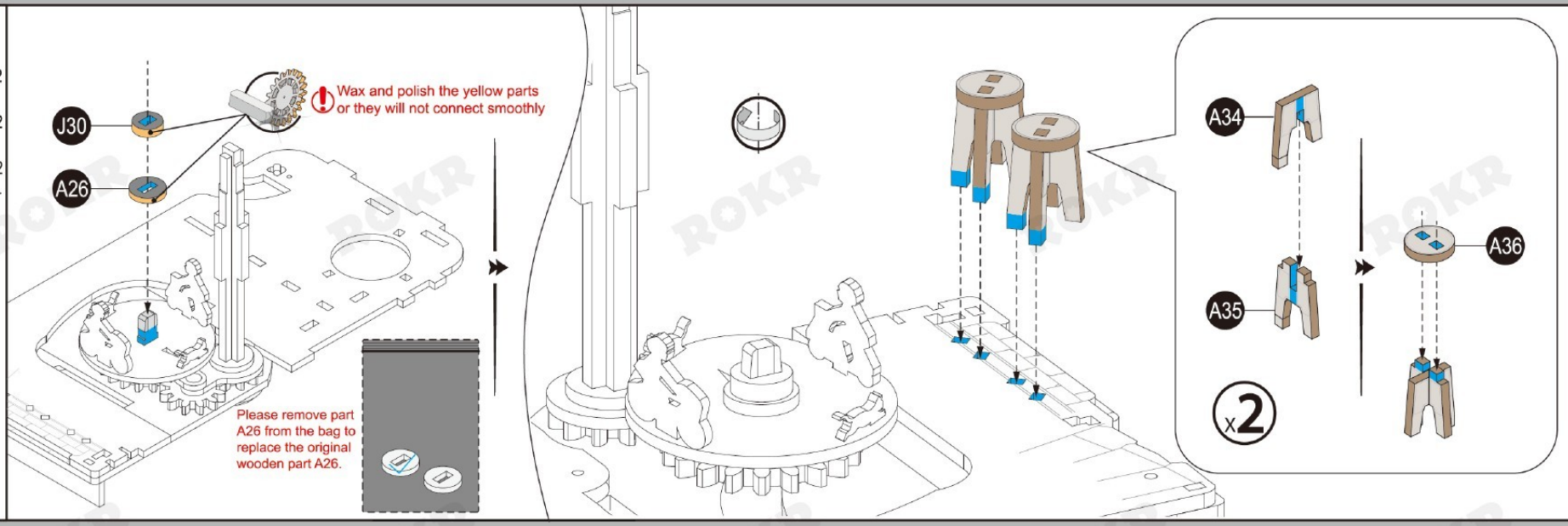

A44
A45
A46 x2
A57
A62
B23
D41
E18

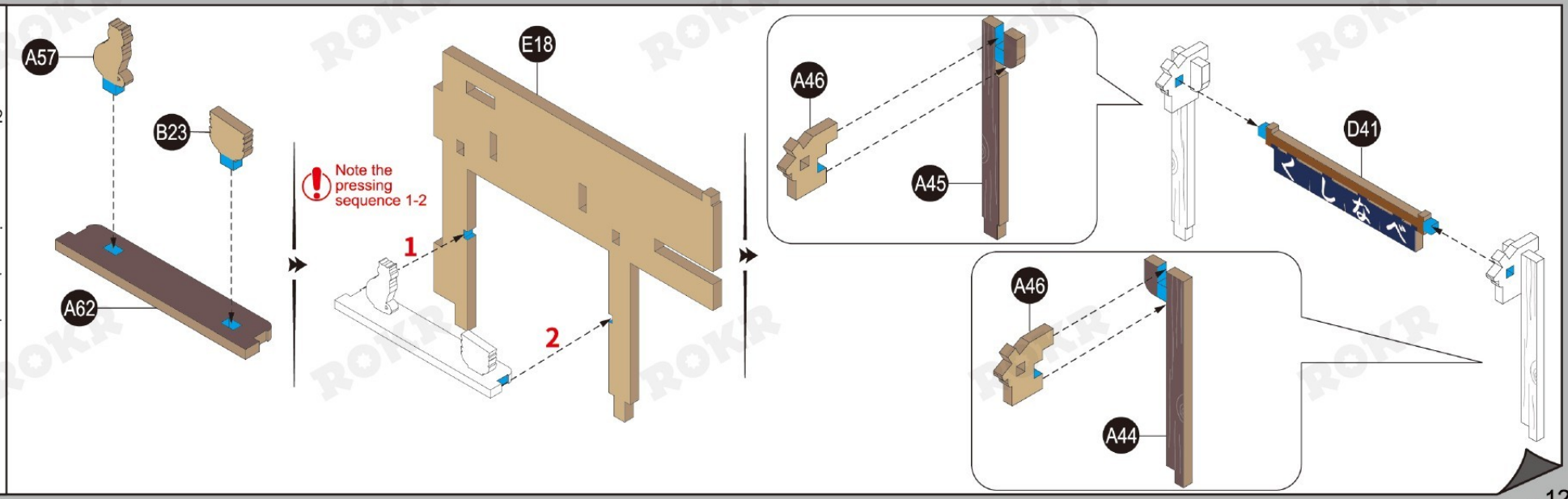

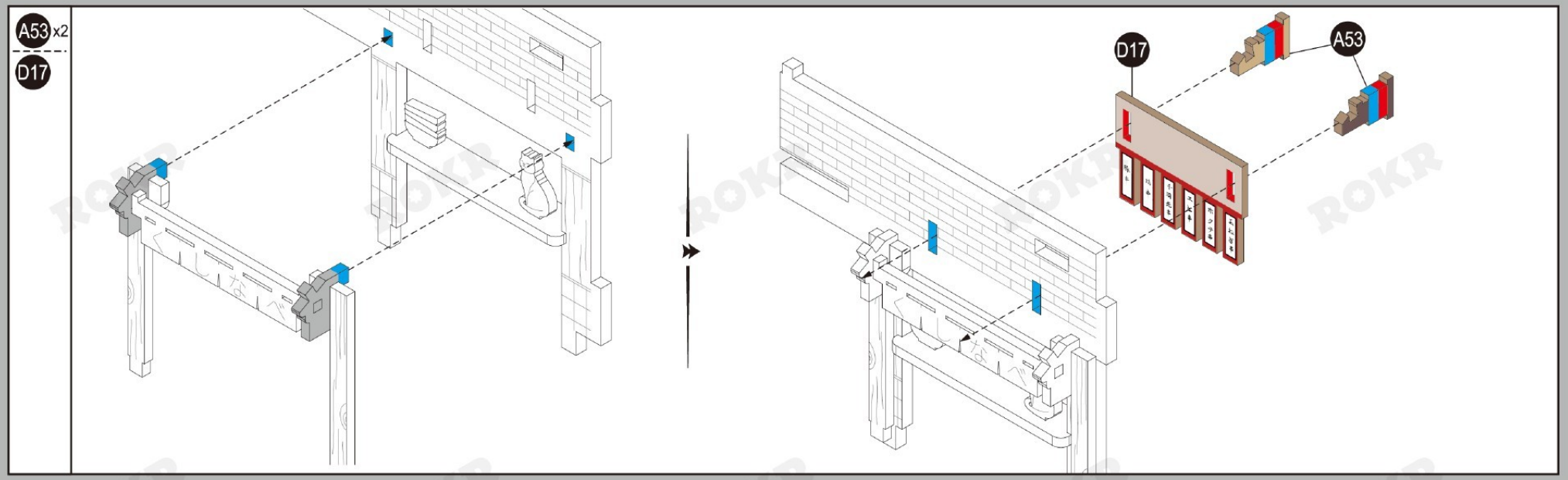
A53 x2
D17
D17
A53

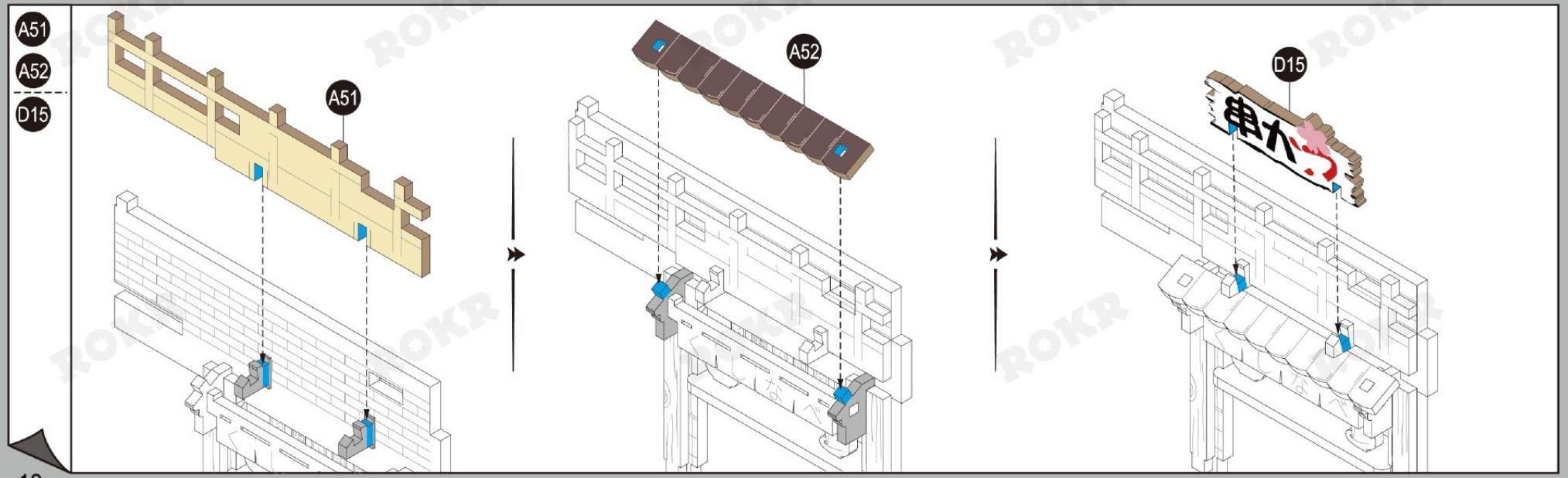
A51
A52
D15
A51
A52
D15

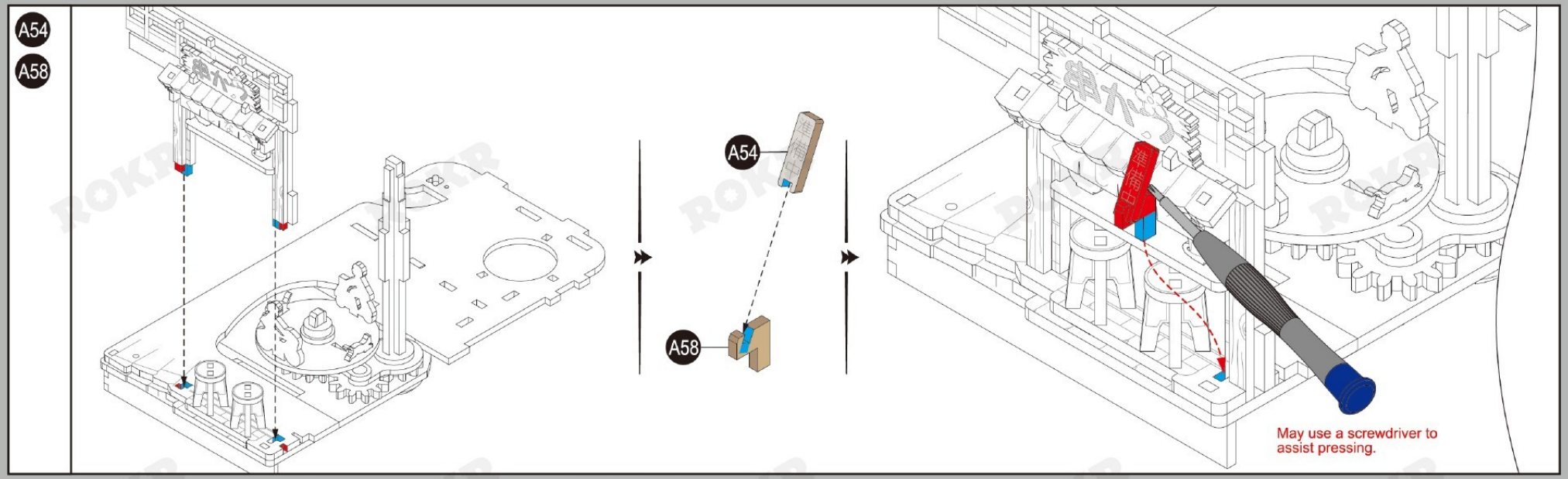
A54
A58
A54
A58
May use a screwdriver to assist pressing.

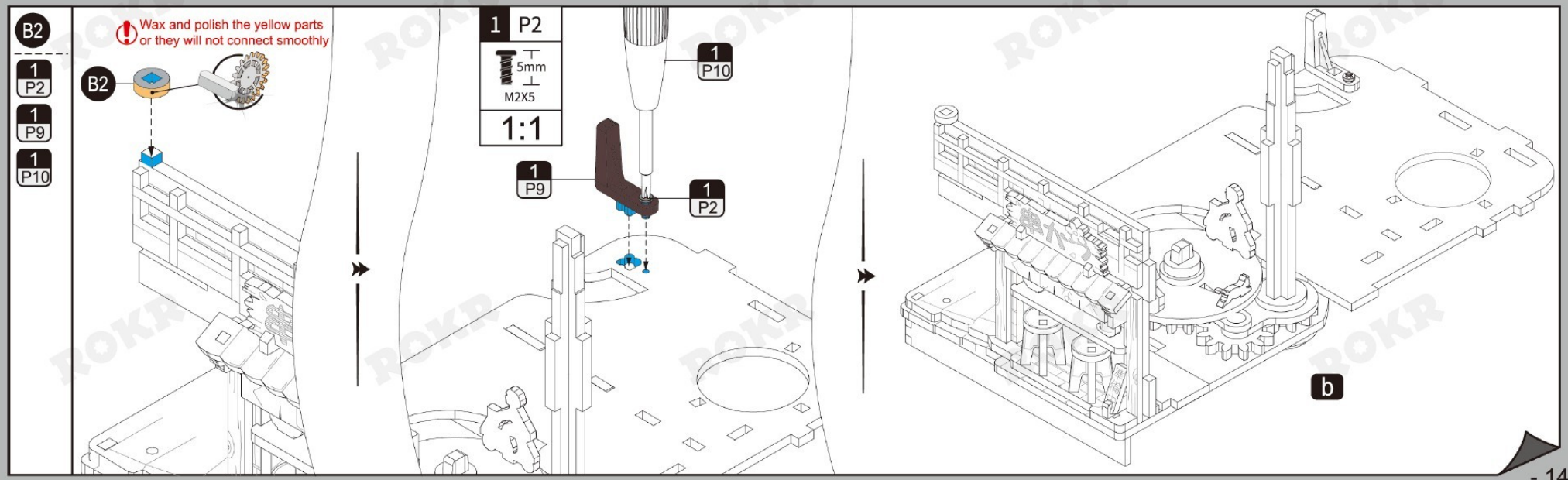
B2
1 P2
1 P9
1 P10
Wax and polish the yellow parts or they will not connect smoothly
B2
1 P2
5mm
M2X5
1:1
1 P10
1 P9
1 P2
b

3

B27

B29 x2

D26

D28

D39

D40



A67

B5

B8

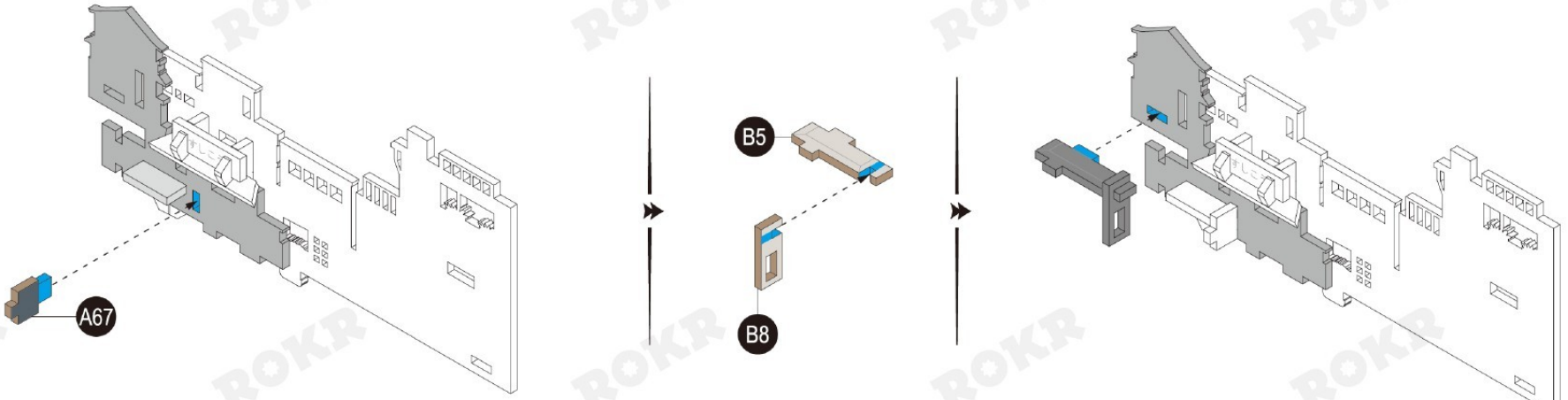

ROKR

A60
D29

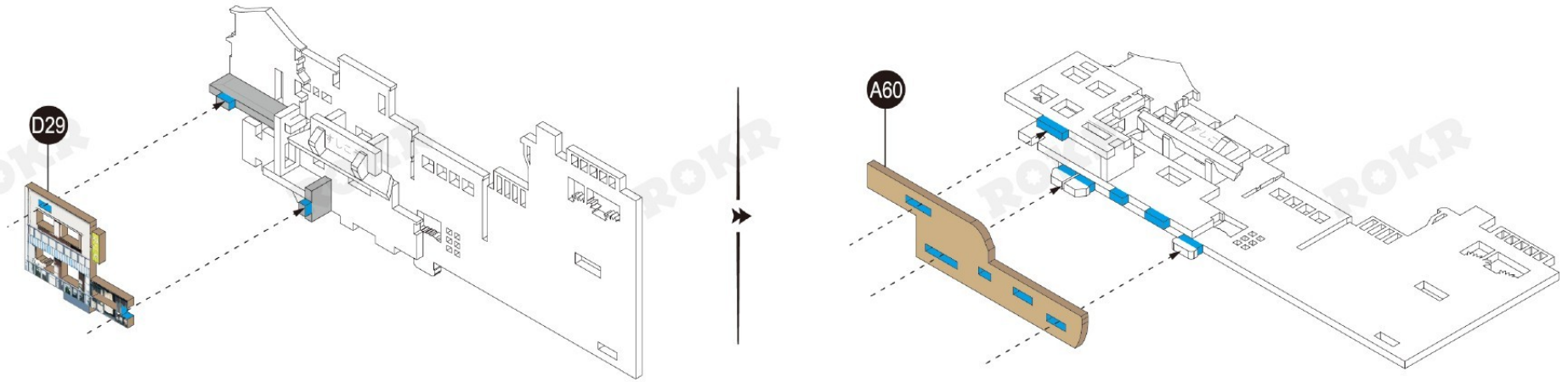

B14
D30

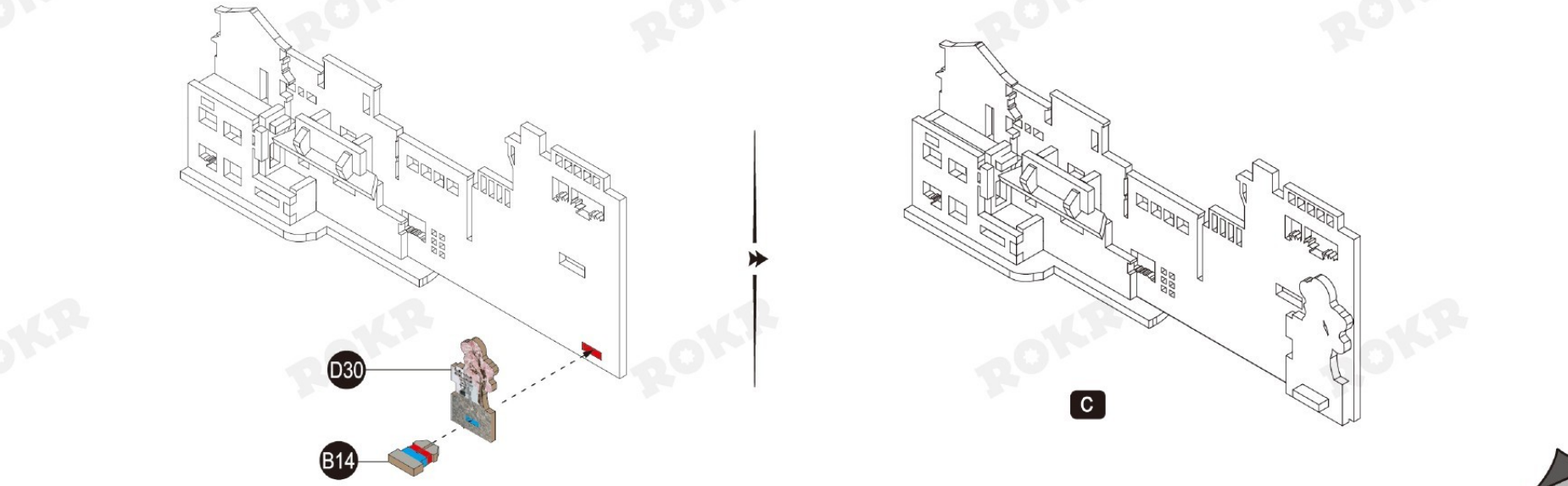

ROKR

4

A79
A80
A81
A82
A85
A86
A87
A90
A91
A92
C15

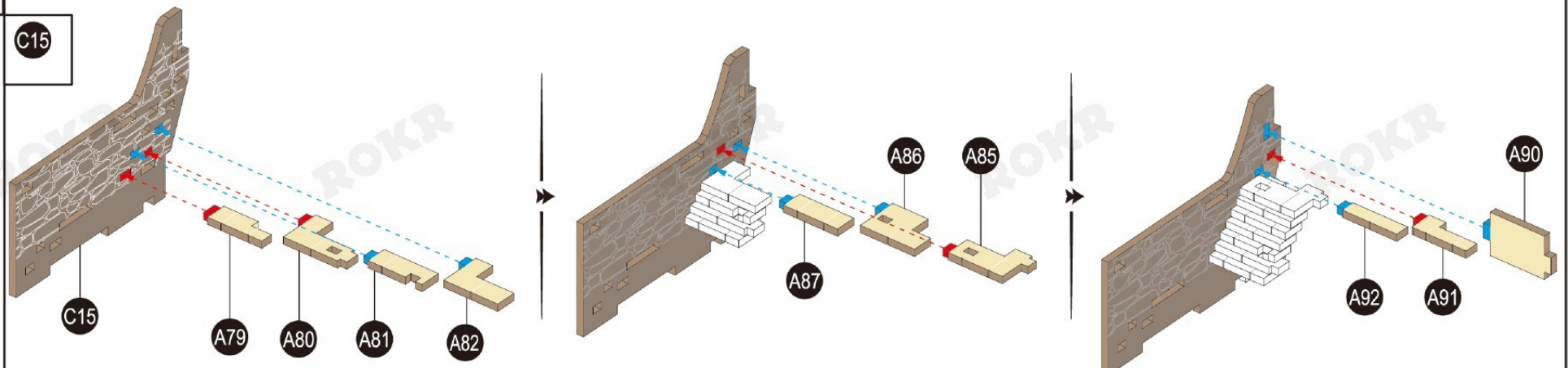

A66
A83 x2
A84
A89 x2
C14

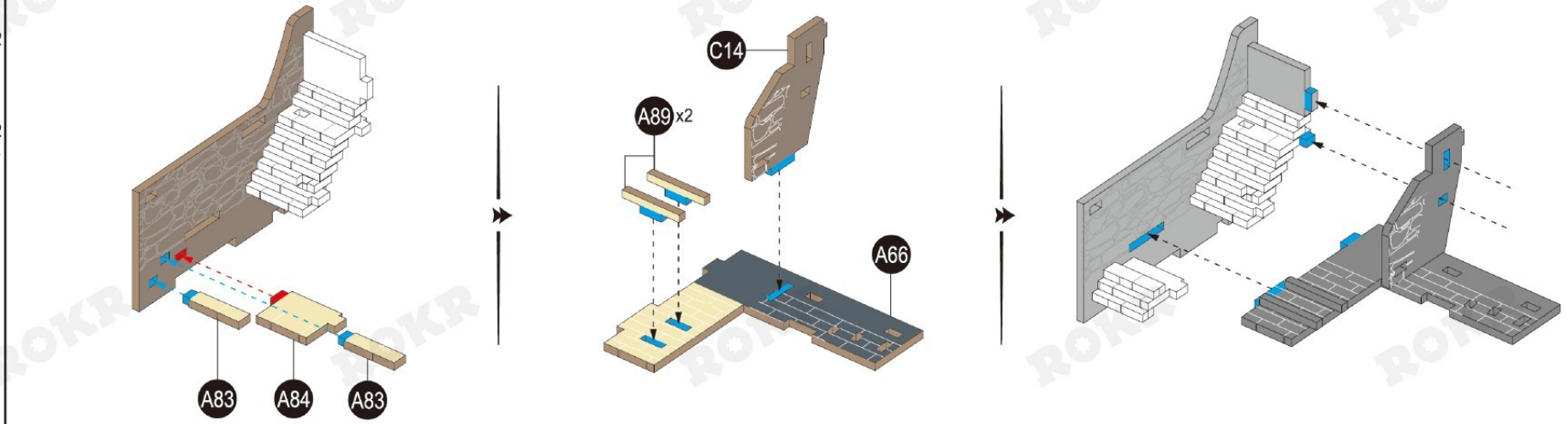

C5
C6
C11

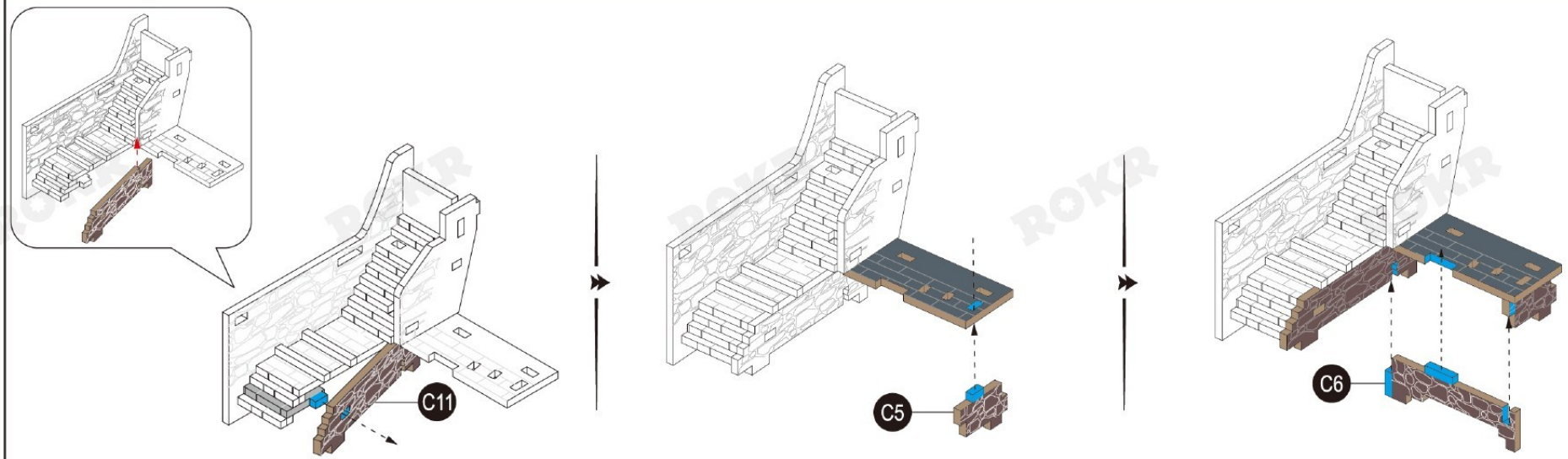

A69
D37
D38
E12

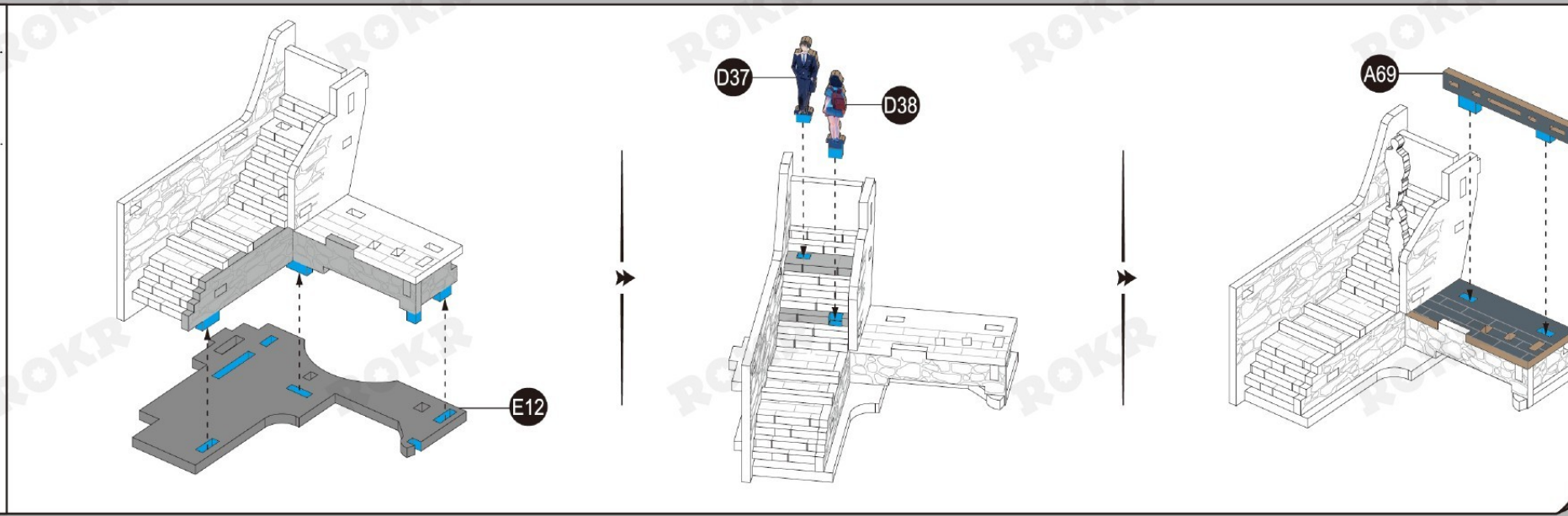

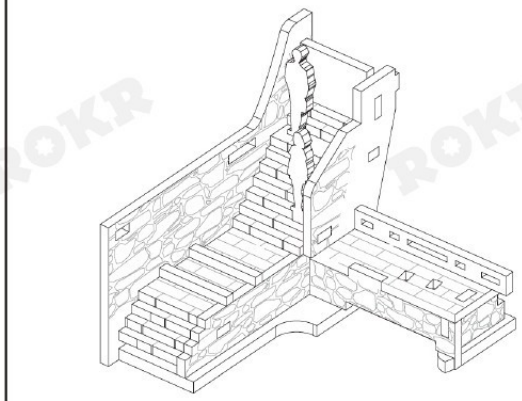

d

5

F3

G6

J27 x2

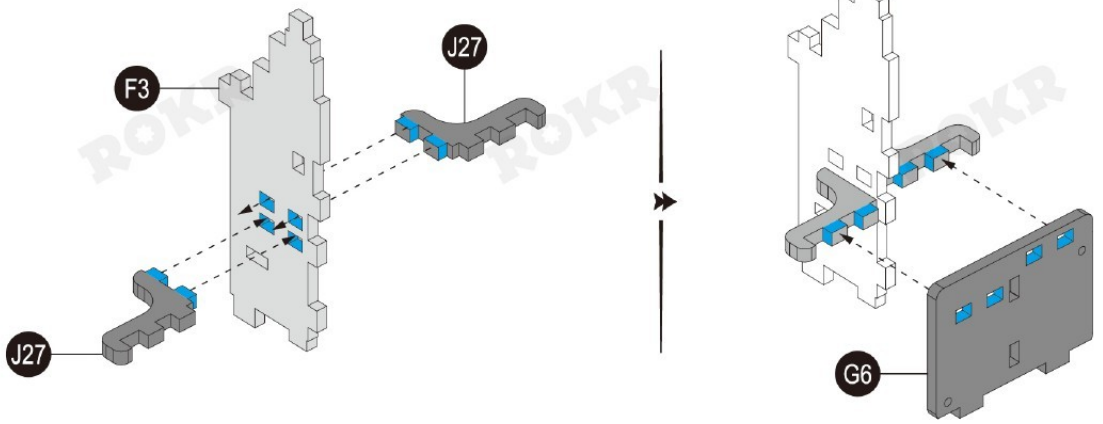

F2

F5

J10

J35

P27

1 P4 x2

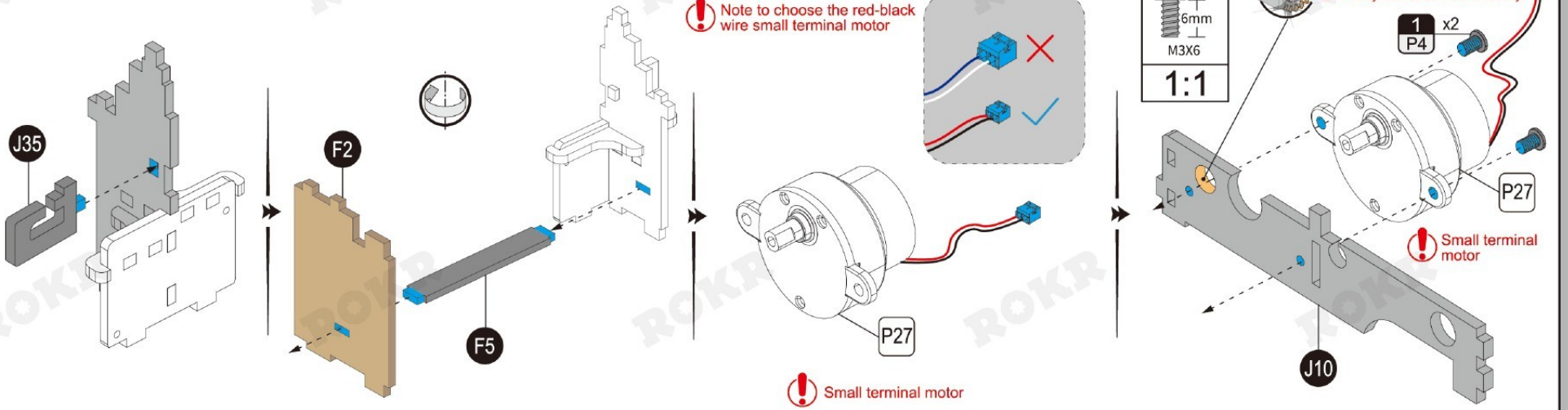

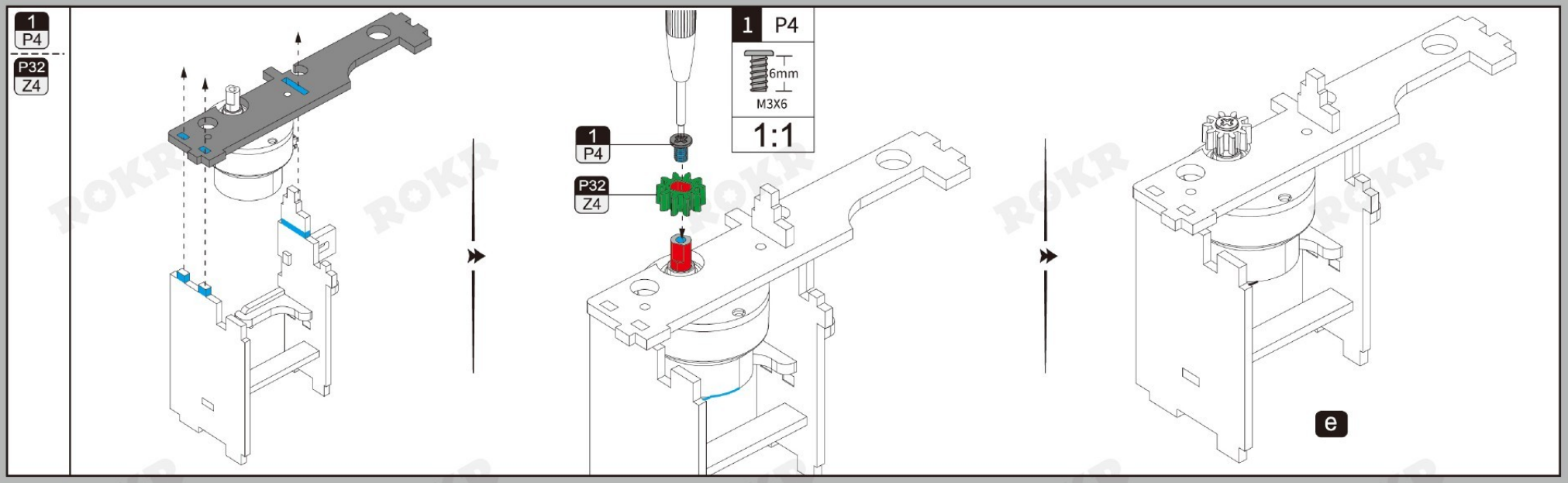
1
P4
P32
Z4
1
P4
P32
Z4
1 P4
6mm
M3X6
1:1
e

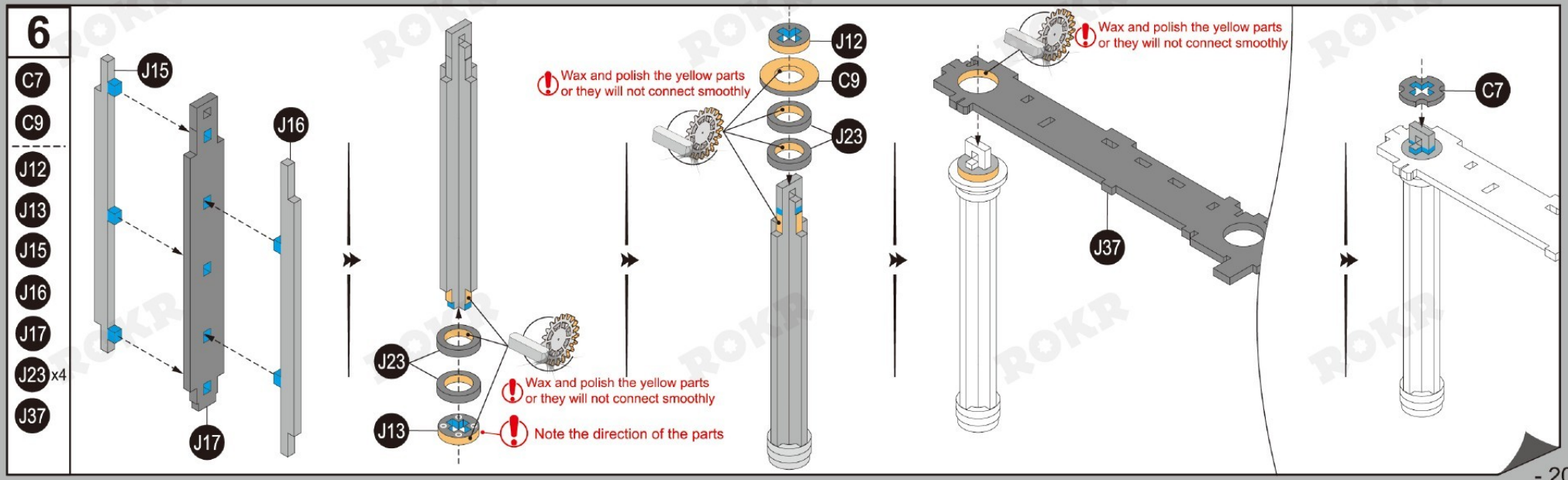
6
C7
C9
J12
J13
J15
J16
J17
J23 x4
J37
J15
J16
J17
J23
J13
Wax and polish the yellow parts
or they will not connect smoothly
Note the direction of the parts
J12
C9
J23
Wax and polish the yellow parts
or they will not connect smoothly
J37
C7

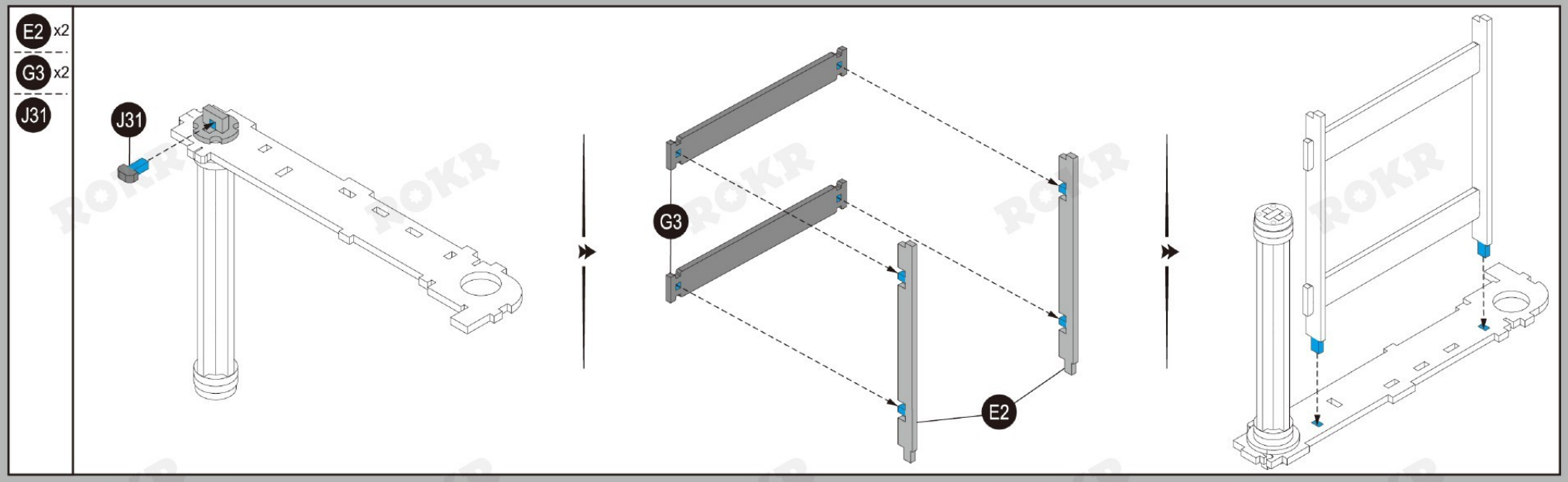
E2 x2
G3 x2
J31
J31
G3
E2

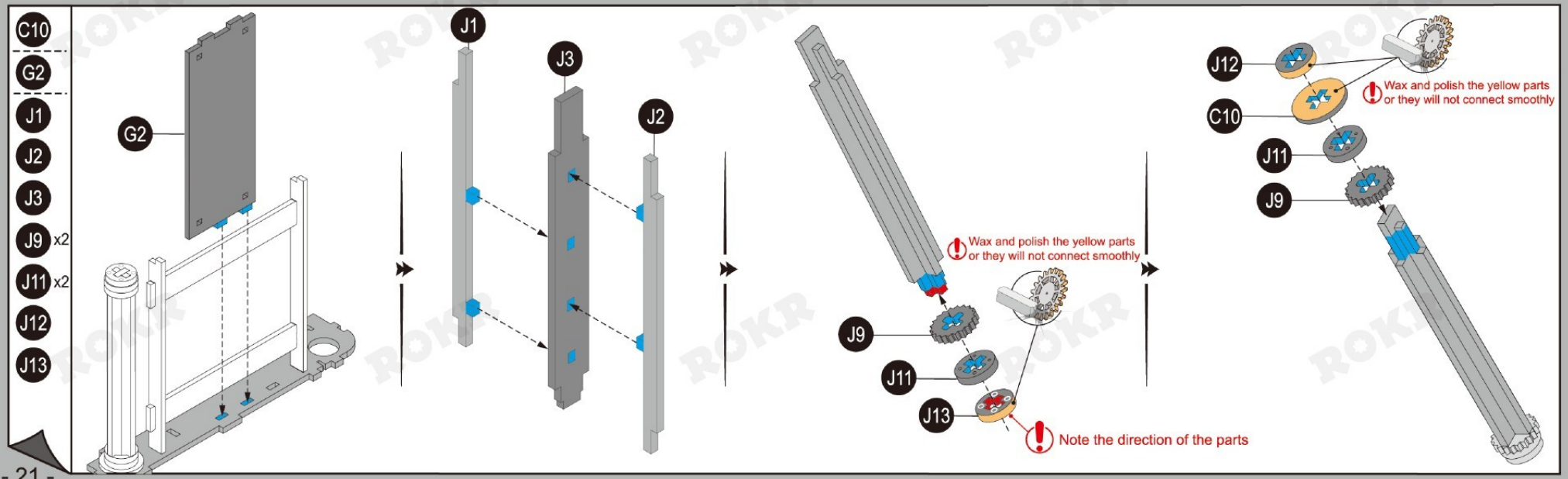
C10
G2
J1
J2
J3
J9 x2
J11 x2
J12
J13
G2
J1
J3
J2
Wax and polish the yellow parts
or they will not connect smoothly
J9
J11
J13
Note the direction of the parts
J12
C10
J11
J9
Wax and polish the yellow parts
or they will not connect smoothly

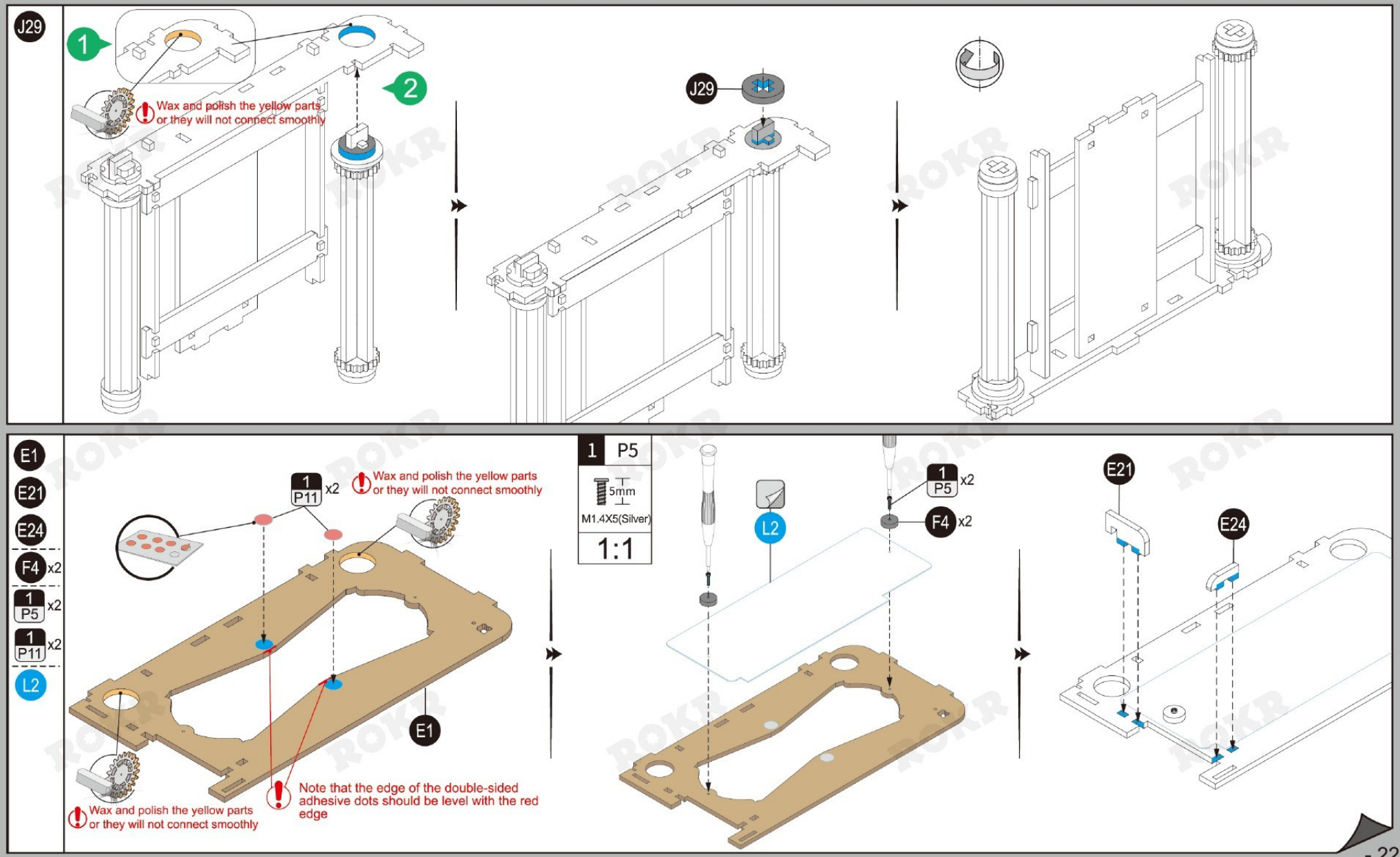
J29
1
2
Wax and polish the yellow parts or they will not connect smoothly
J29
E1
E21
E24
F4 x2
1 P5 x2
1 P11 x2
L2
1 P11 x2
Wax and polish the yellow parts or they will not connect smoothly
E1
Wax and polish the yellow parts or they will not connect smoothly
Note that the edge of the double-sided adhesive dots should be level with the red edge
1 P5
5mm
M1.4X5(Silver)
1:1
L2
1 P5 x2
F4 x2
E21
E24

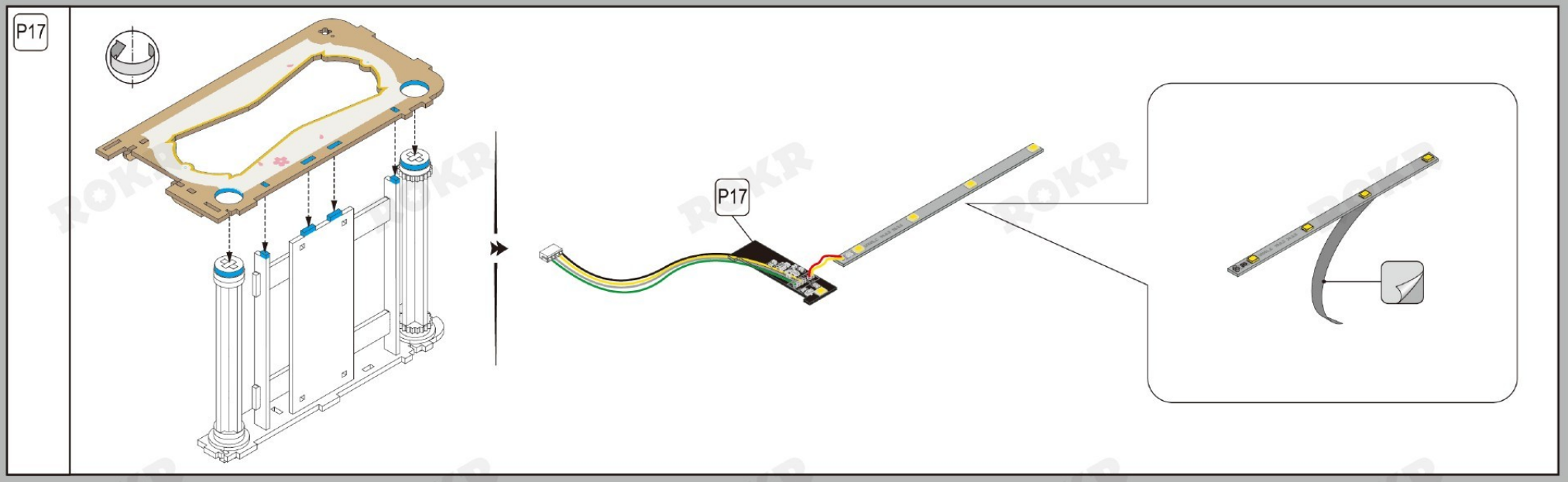
P17
P17

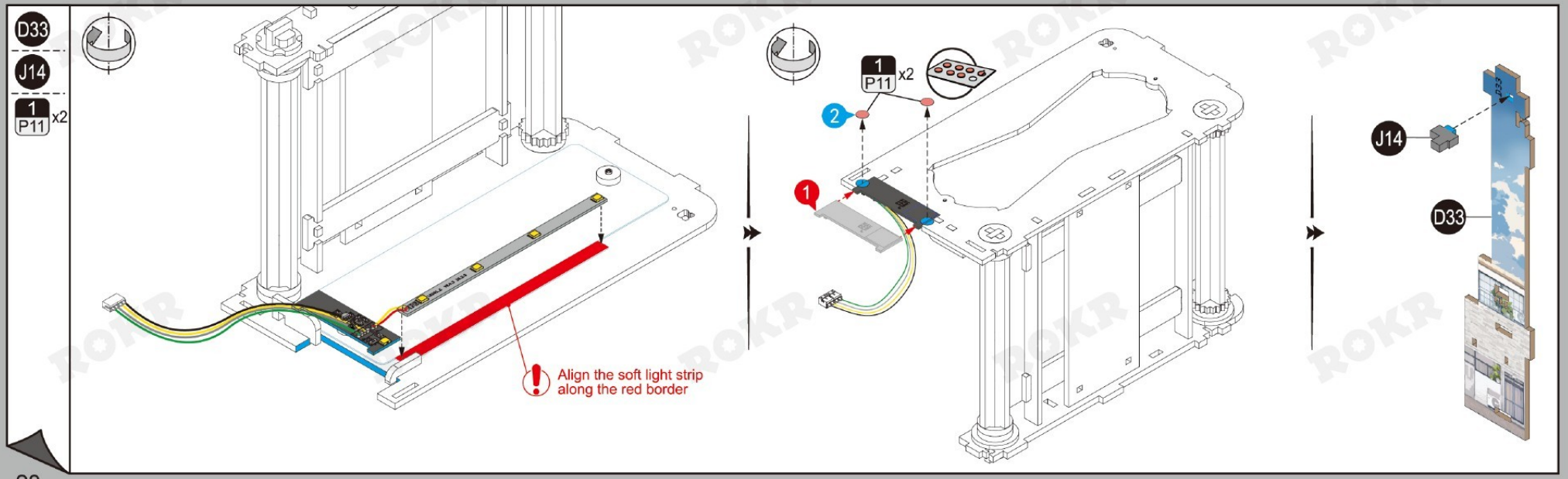
D33
J14
1
P11
x2
Align the soft light strip
along the red border
1
P11
x2
2
1
J14
D33

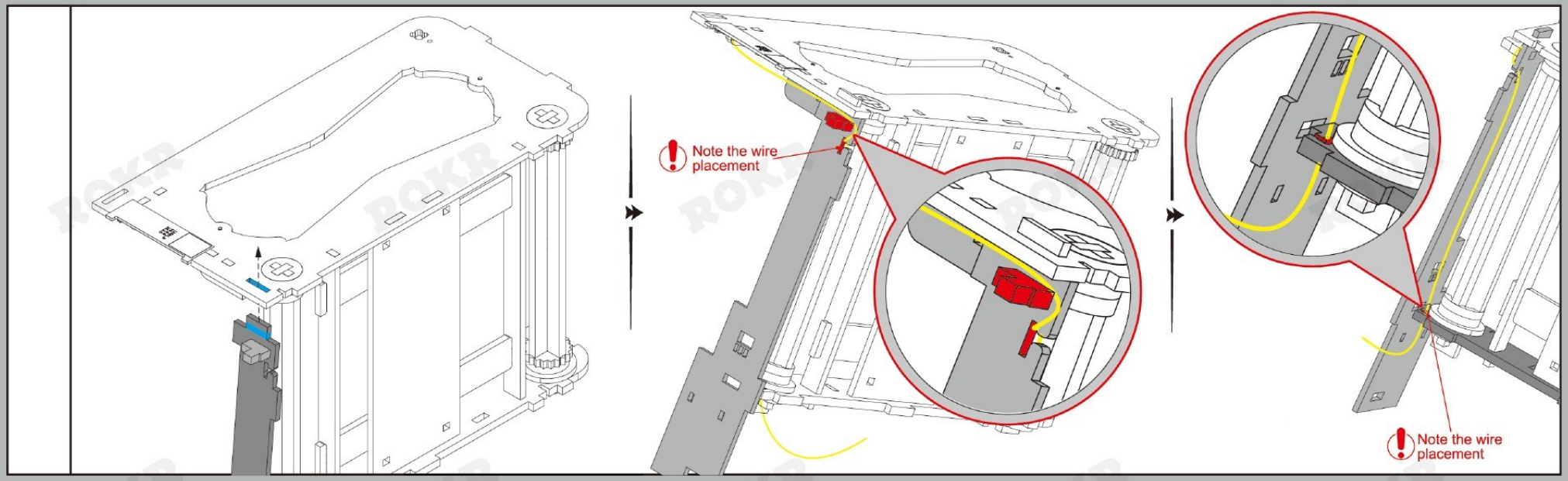
Note the wire placement
Note the wire placement

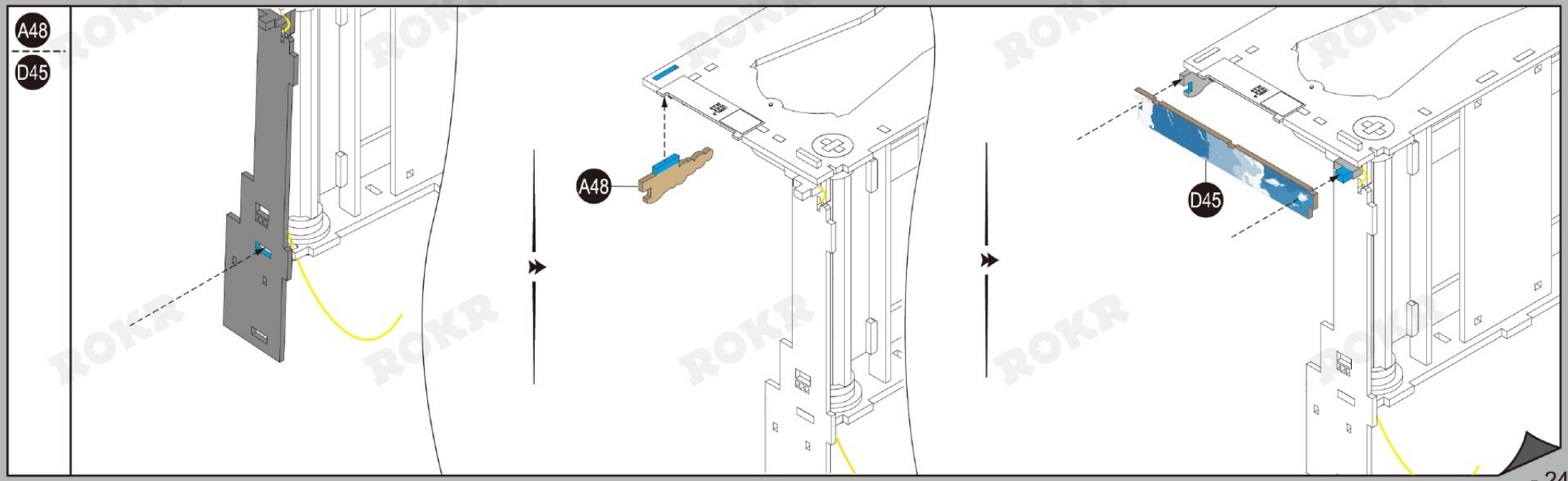
A48
D45
A48
D45

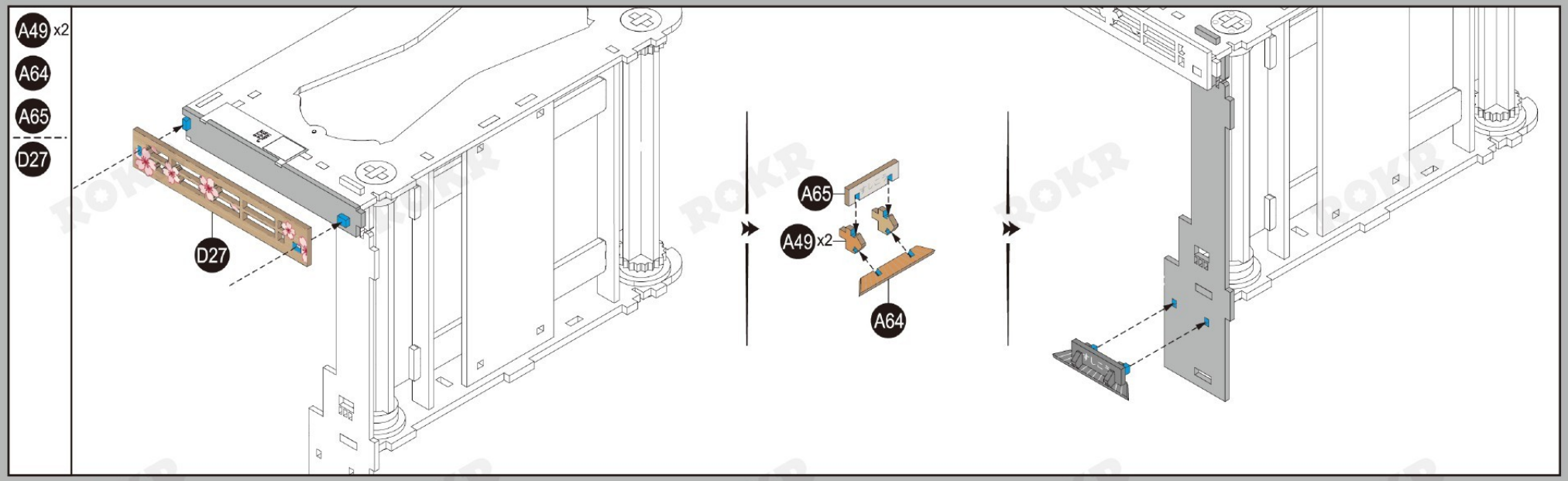
A49 x2
A64
A65
D27
D27
A65
A49 x2
A64

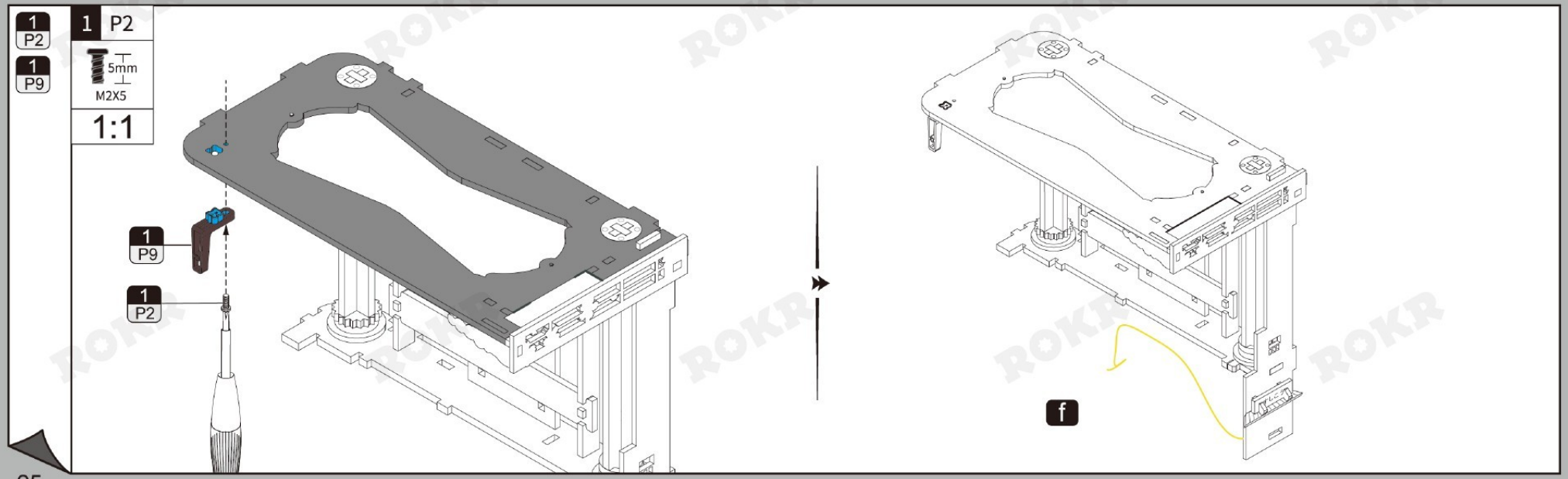
1
P2
1
P9
1 P2
5mm
M2X5
1:1
1
P9
1
P2
f

7

E14x3

P22

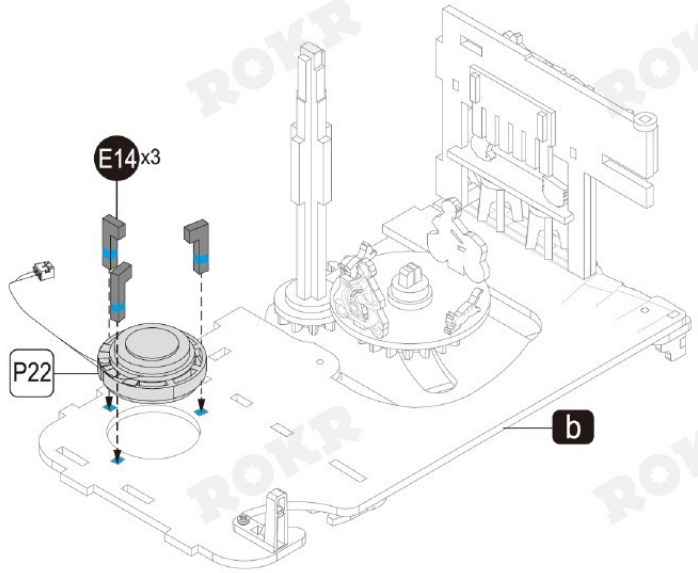

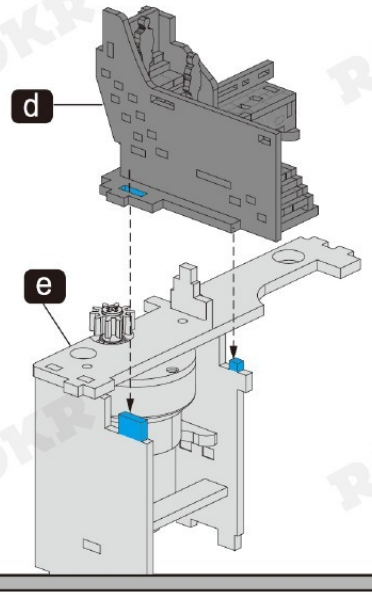

J32

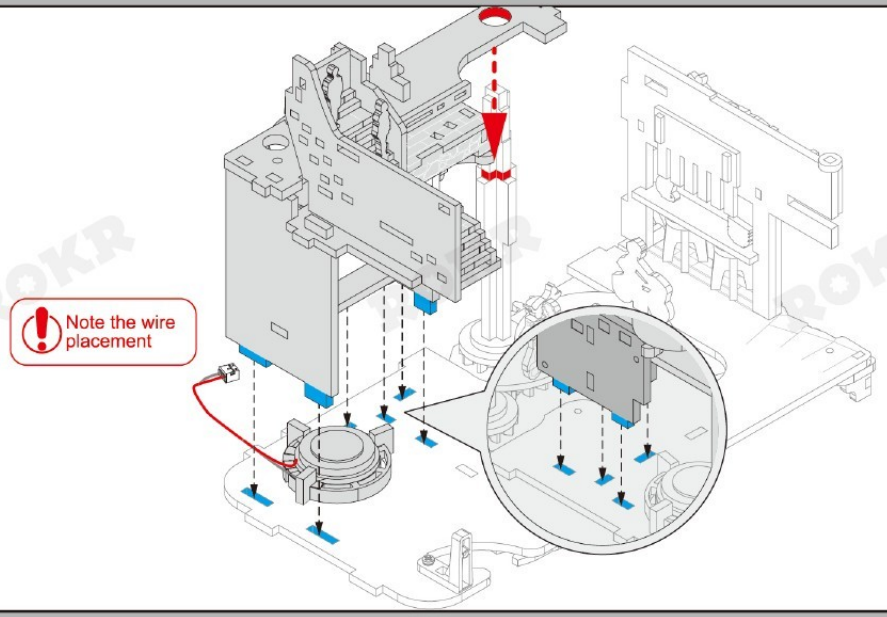

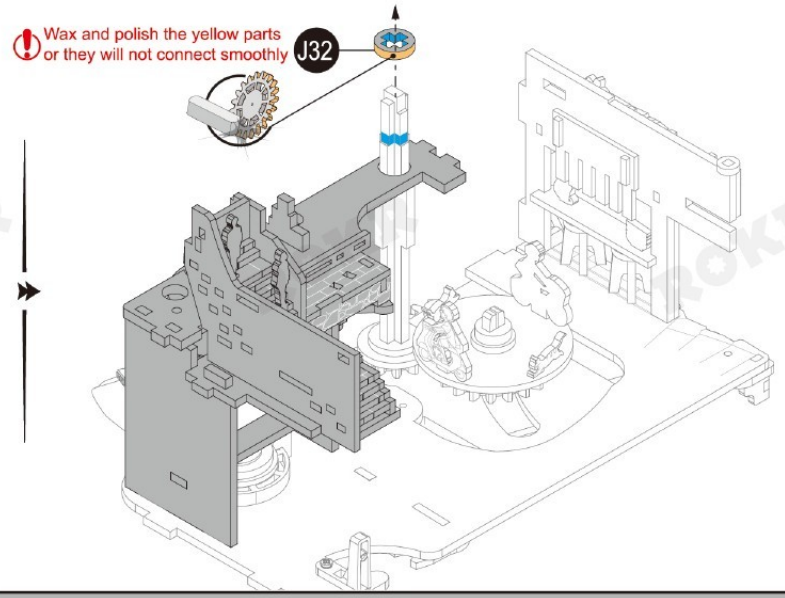

C2 x2
C8
C10
E11
G12
J4
J5
J6
J8
J24
P32 Z3

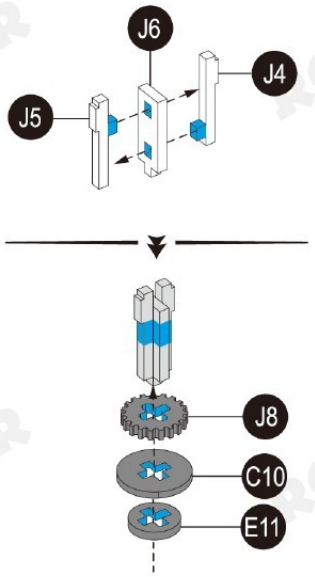

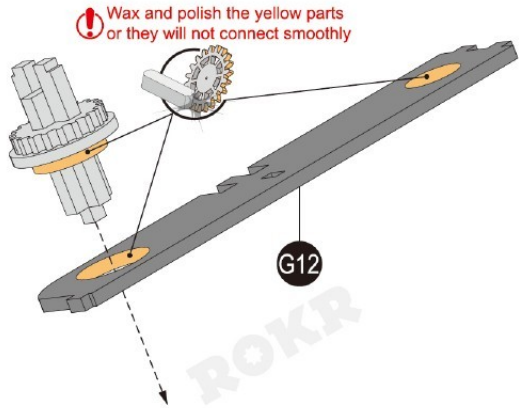

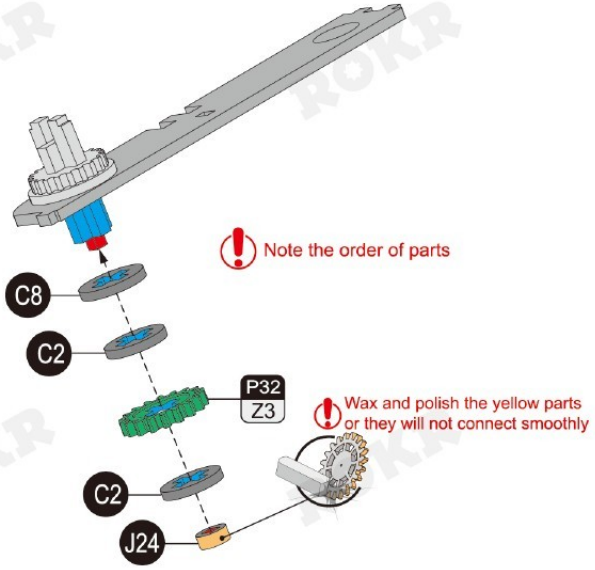

A22
E26
G10
J7

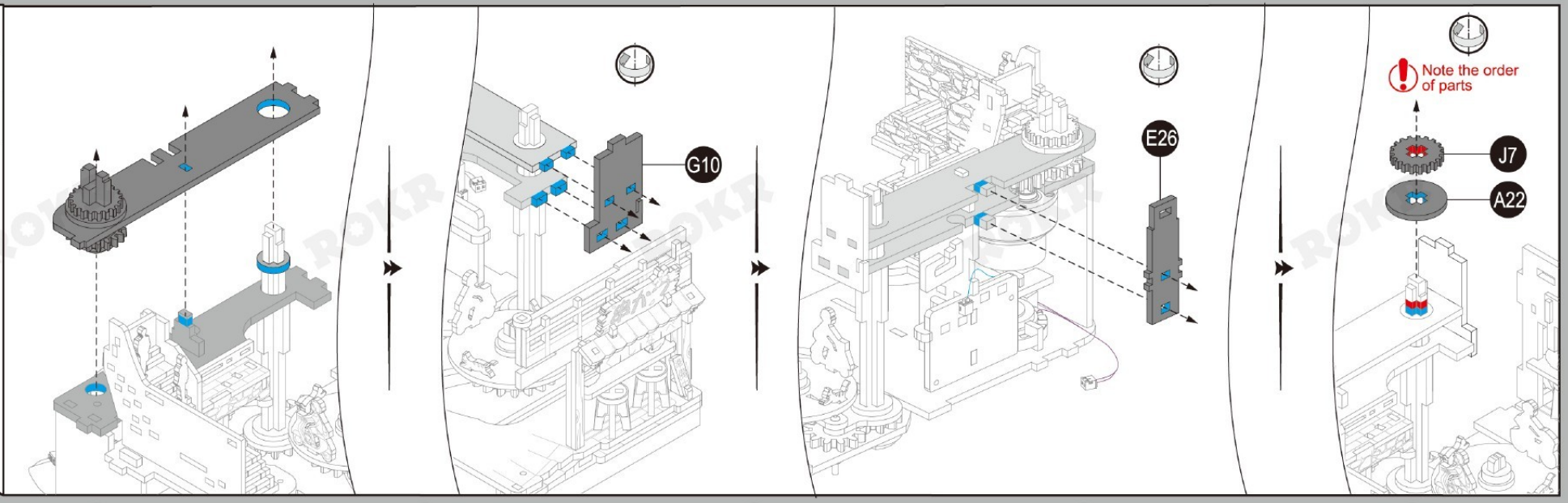

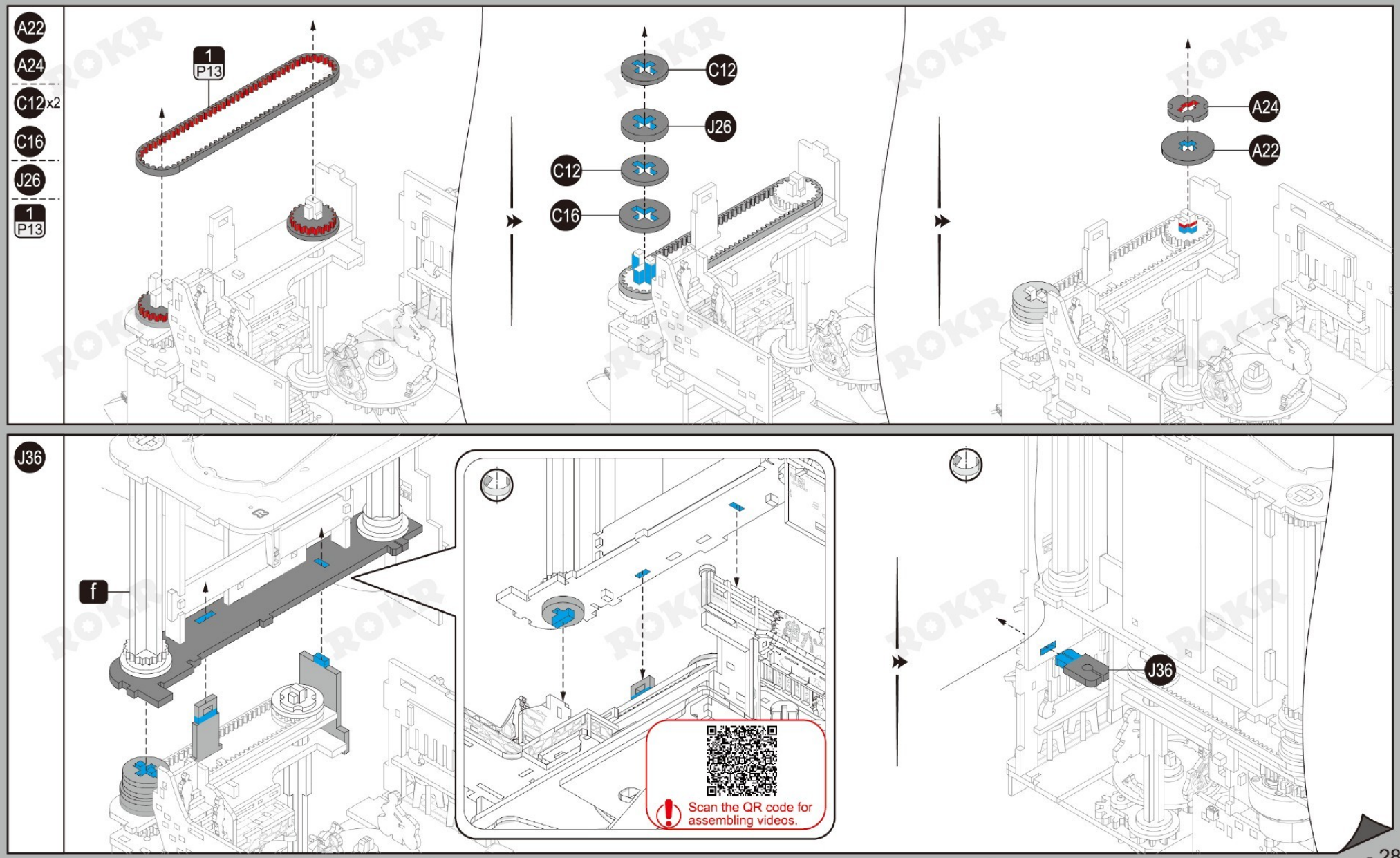
A22
A24
C12 x2
C16
J26
1
P13
1
P13
C12
J26
C12
C16
A24
A22
J36
f
J36
Scan the QR code for assembling videos.

C3

E9

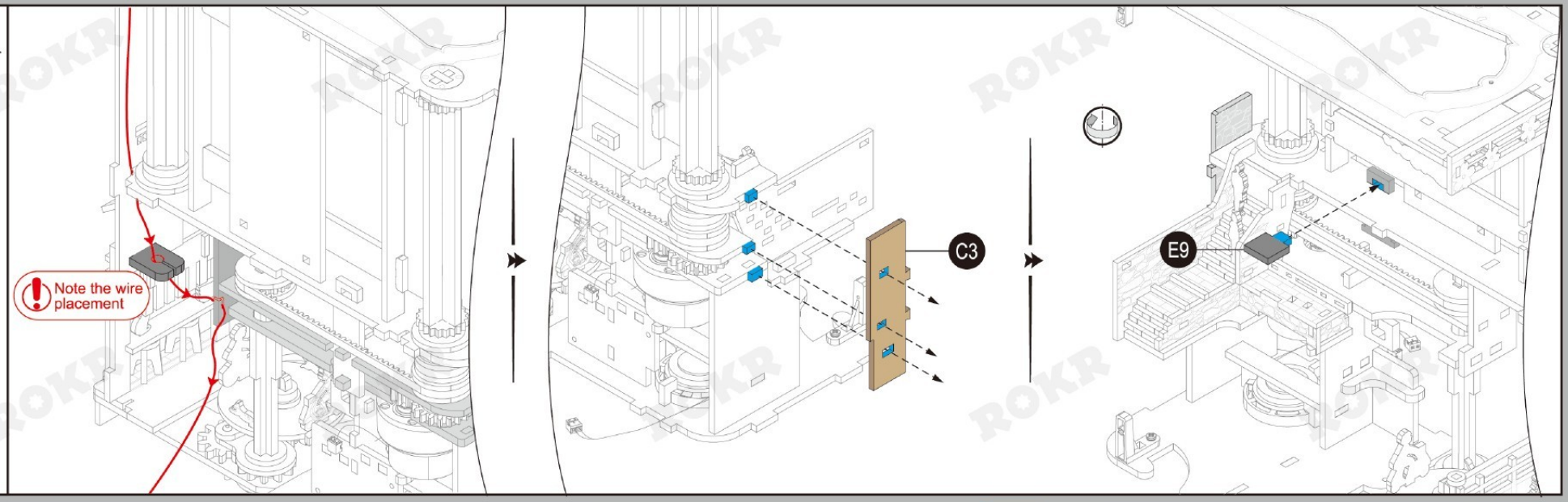

P23 x2

P28

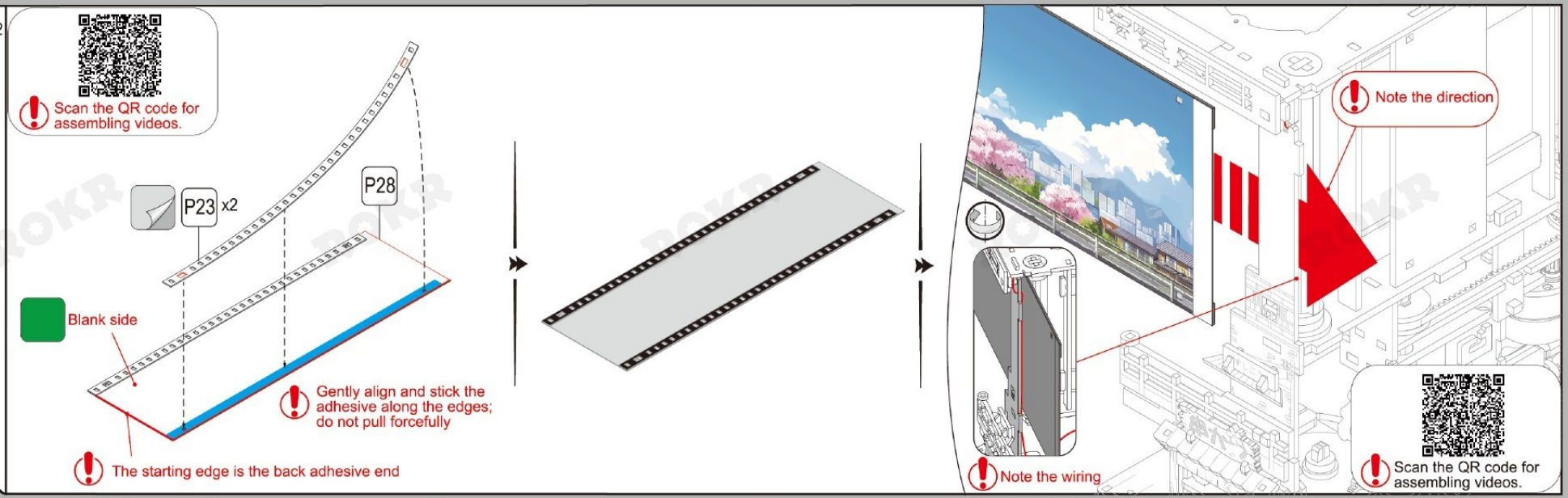

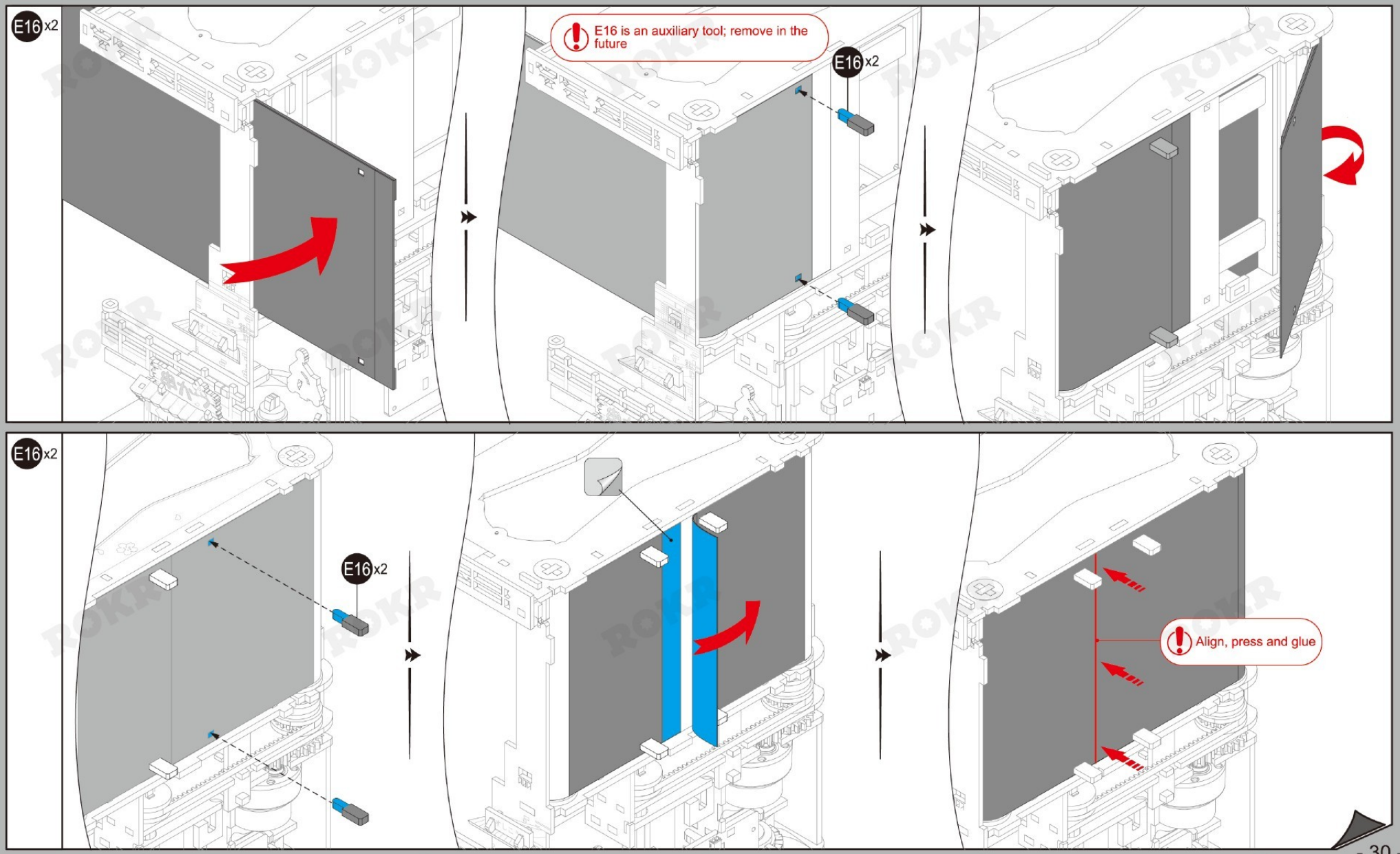
E16 x2
E16 is an auxiliary tool; remove in the future
E16 x2
E16 x2
Align, press and glue

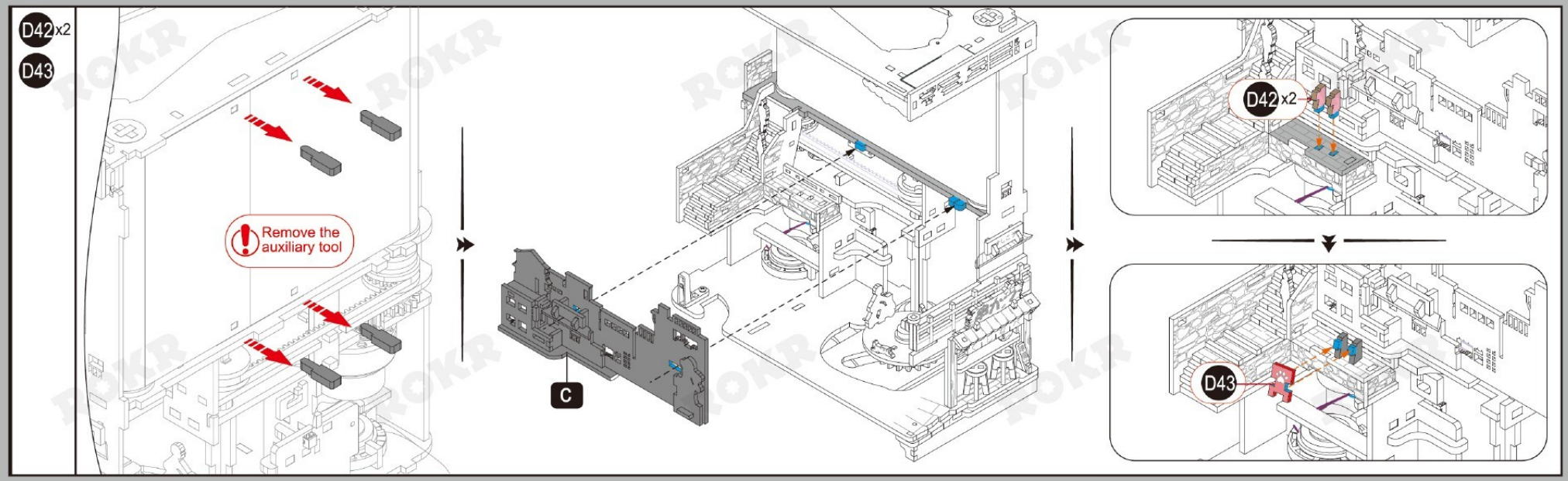
D42 x2
D43
Remove the auxiliary tool
C
D42 x2
D43

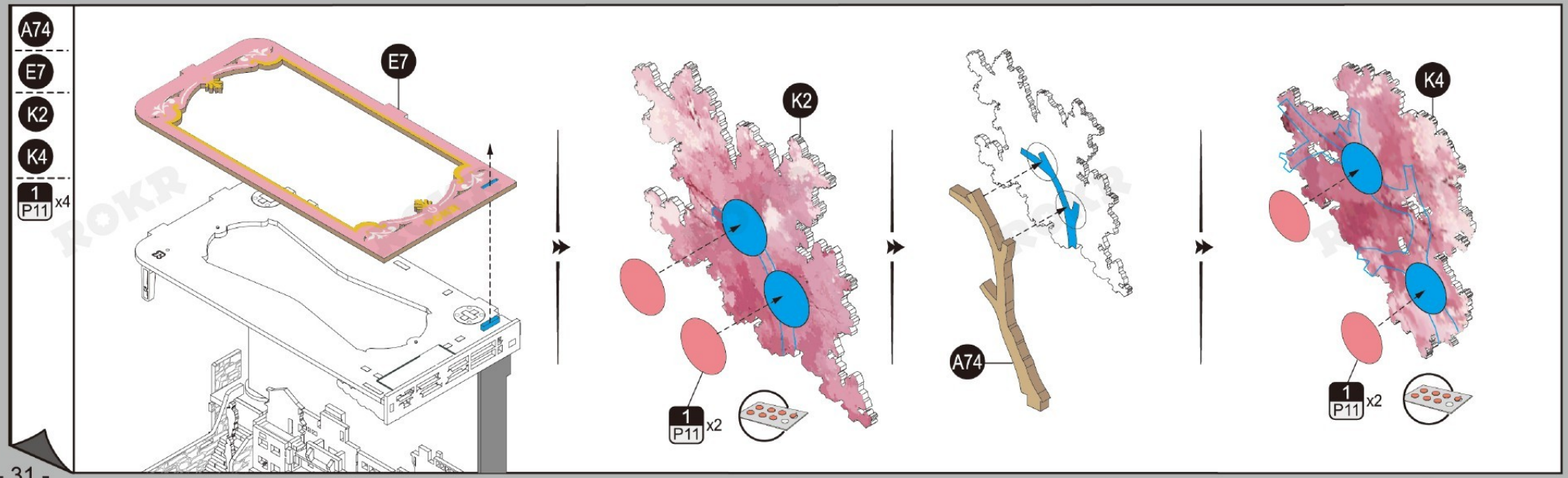
A74
E7
K2
K4
1 P11 x4
E7
K2
1 P11 x2
A74
K4
1 P11 x2

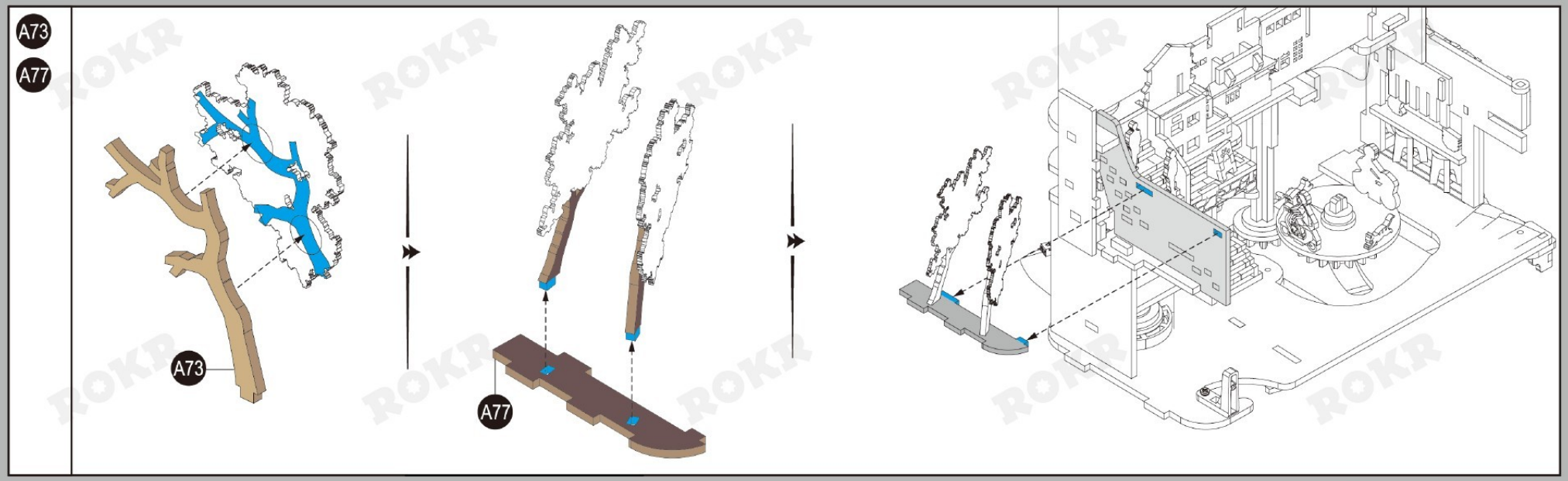
A73
A77
A73
A77

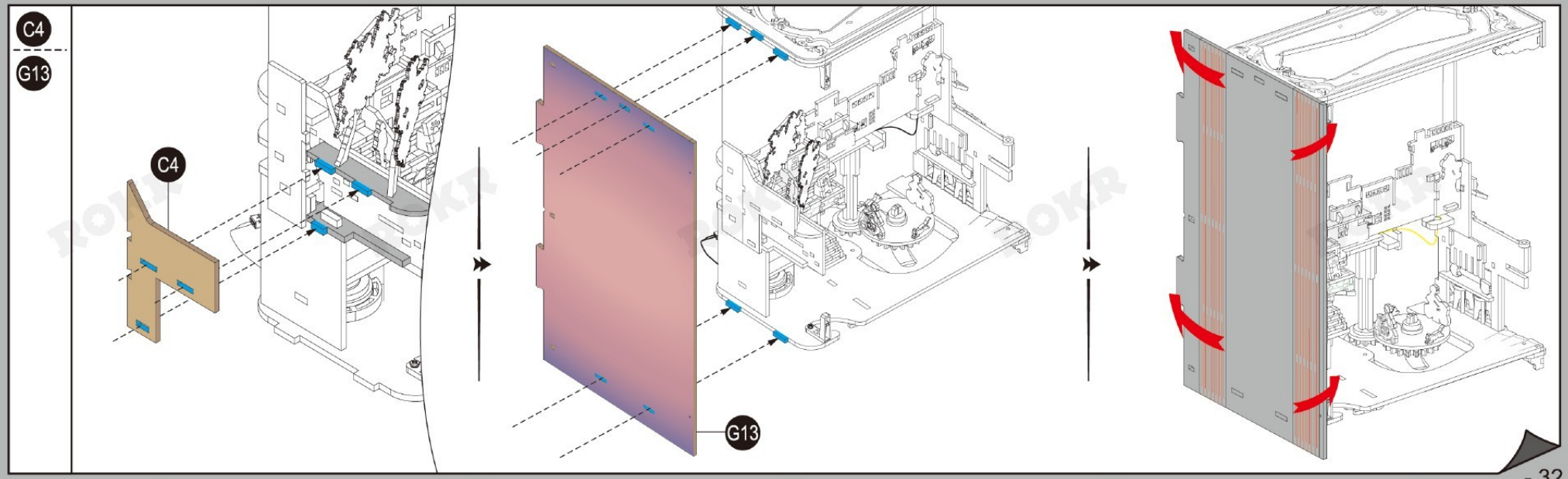
C4
G13
C4
G13

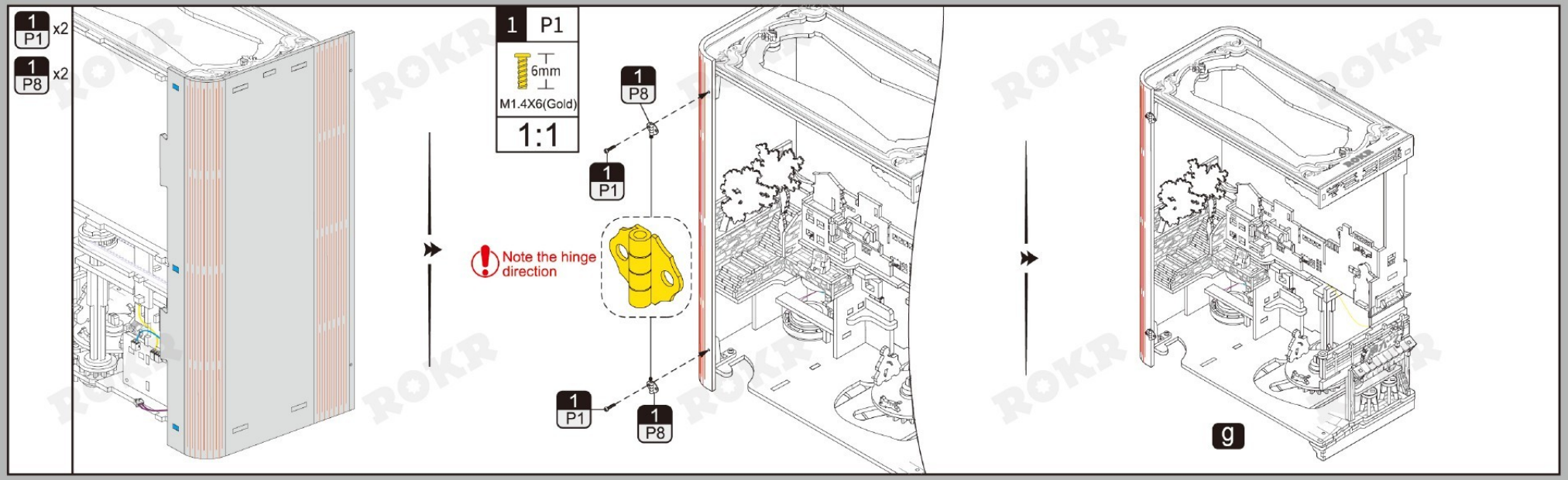
1 P1 x2
1 P8 x2
1 P1
6mm
M1.4X6(Gold)
1:1
1 P8
1 P1
Note the hinge direction
1 P1
1 P8
g

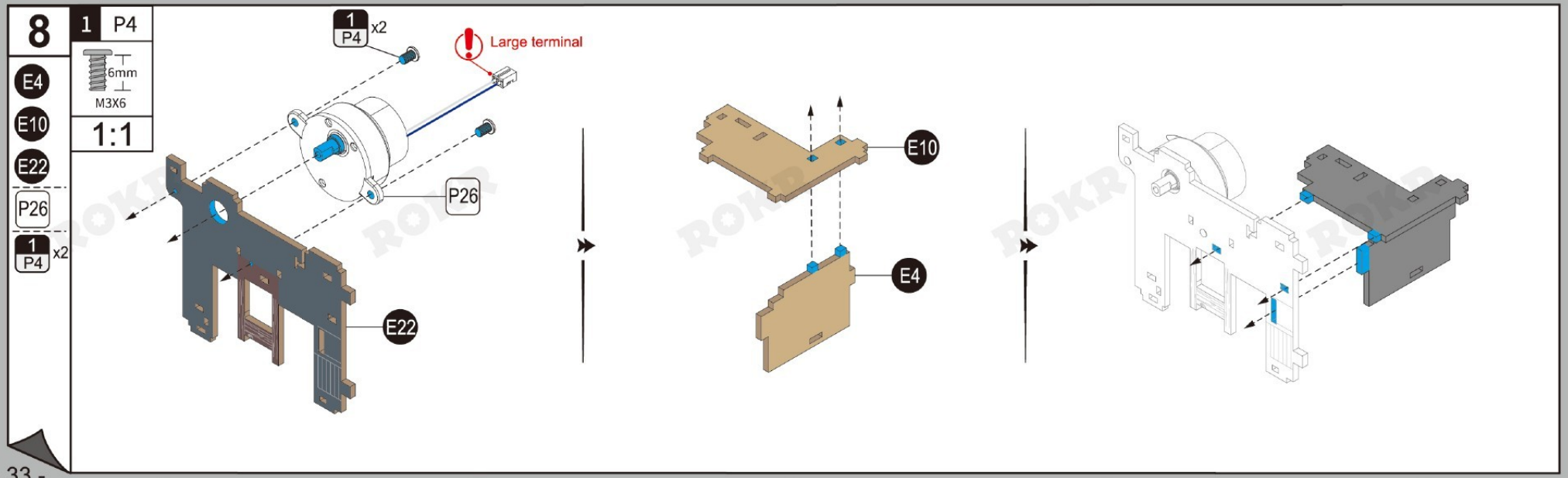
8
E4
E10
E22
P26
1 P4 x2
1 P4
6mm
M3X6
1:1
1 P4 x2
Large terminal
P26
E22
E10
E4

A88
B26
E8

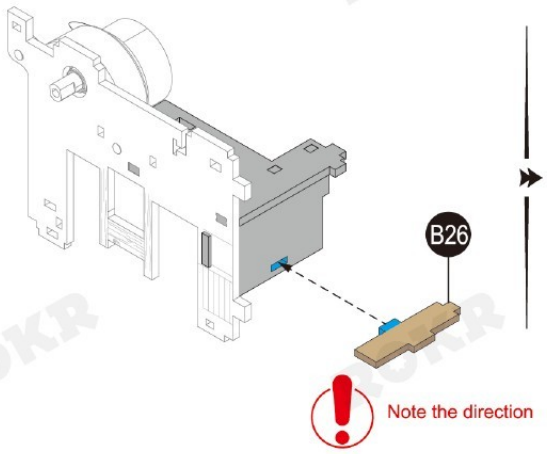

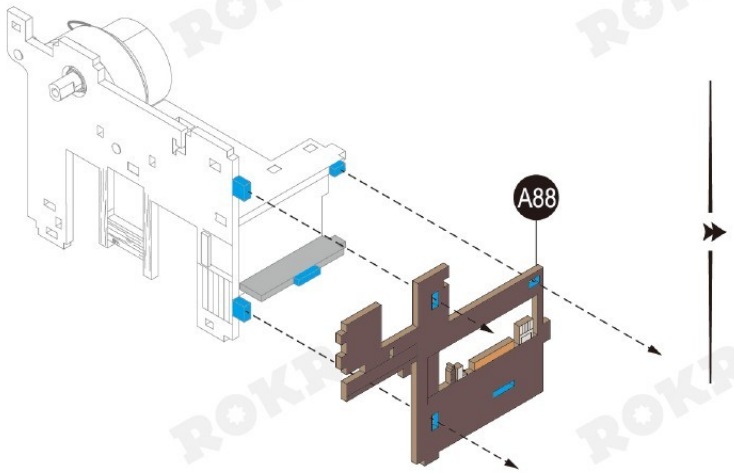

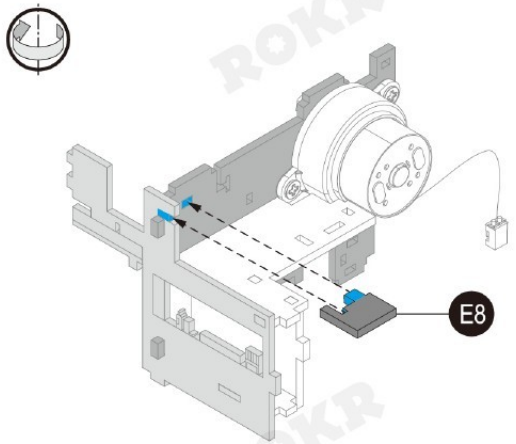

A55
A56
A59
A63
E13

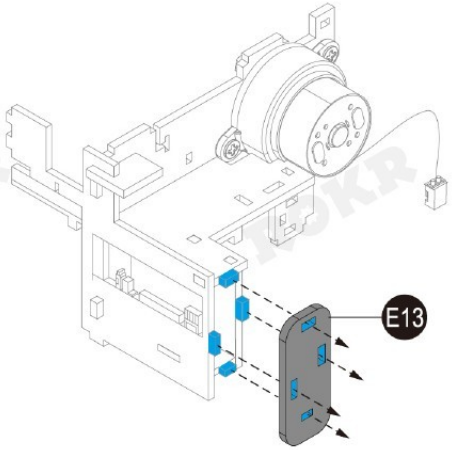

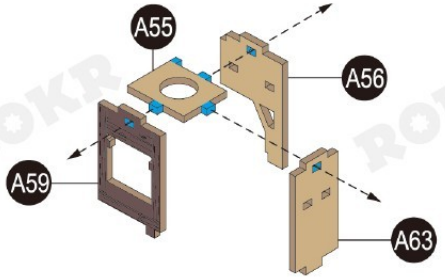

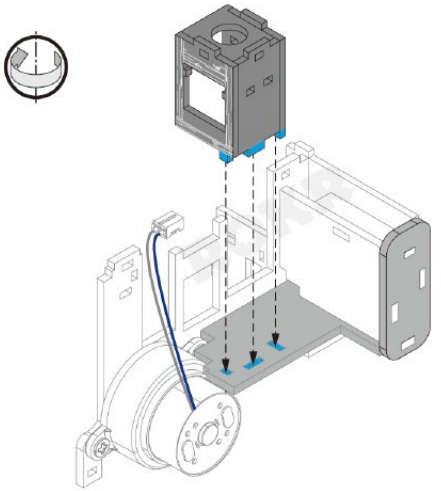

A42
A50
B3

Wax and polish the yellow parts or they will not connect smoothly

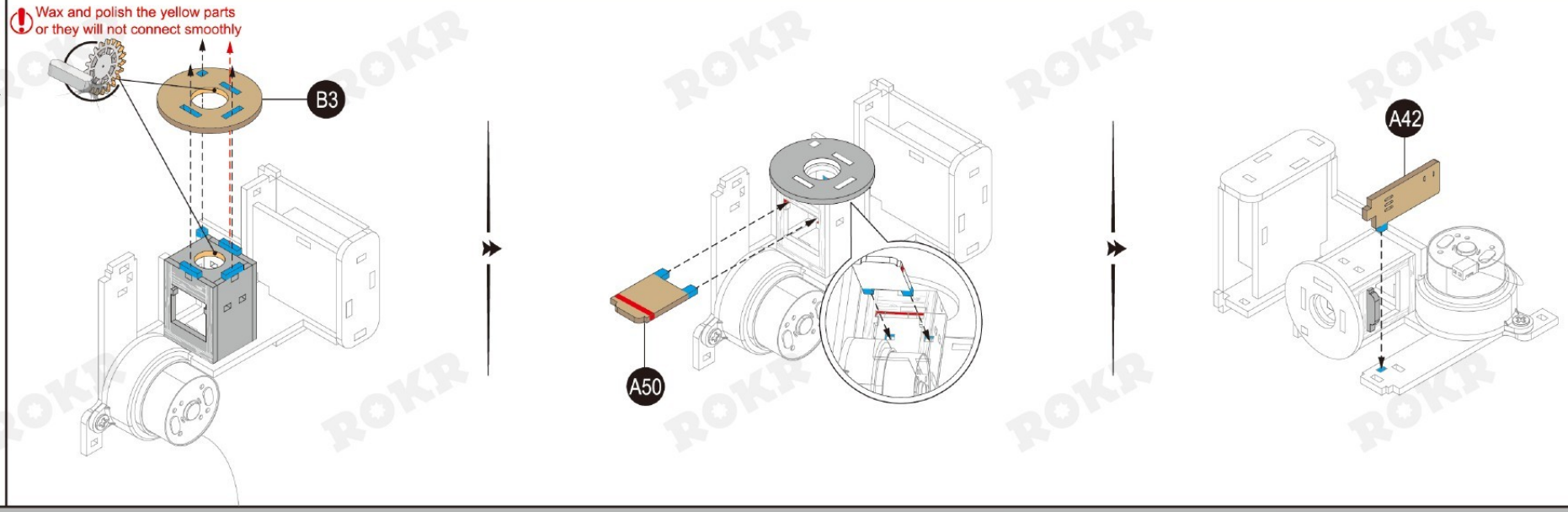

A41
A43
A47 x2
D13
D18

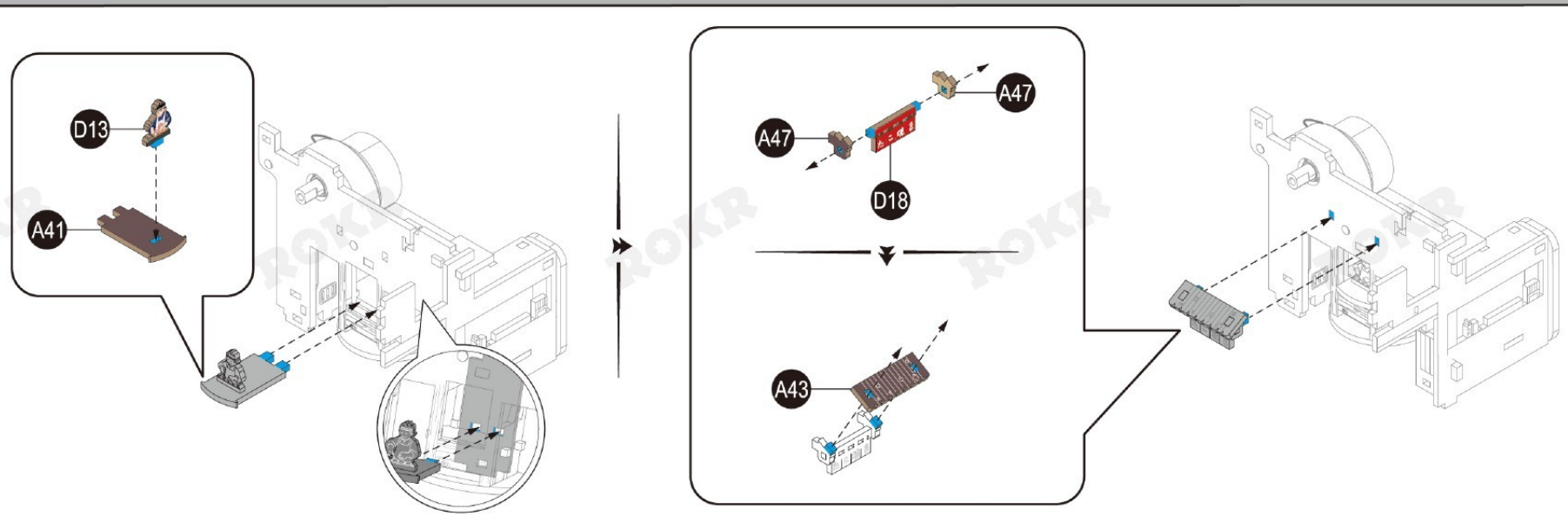

C13
D21
D23
D32
L1

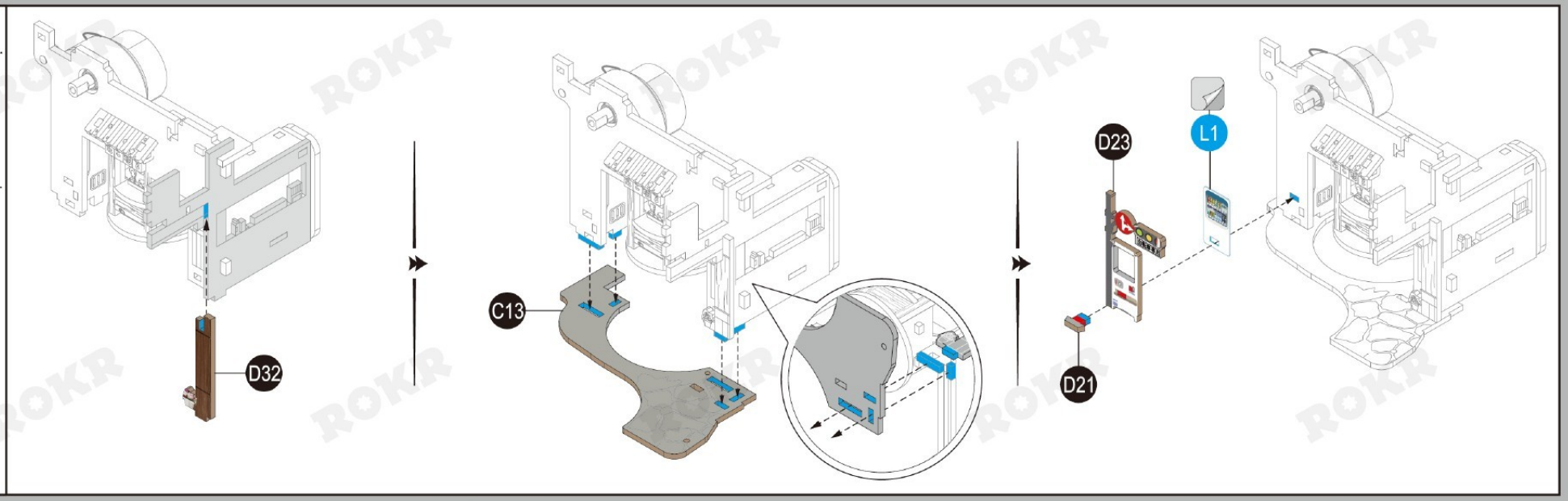

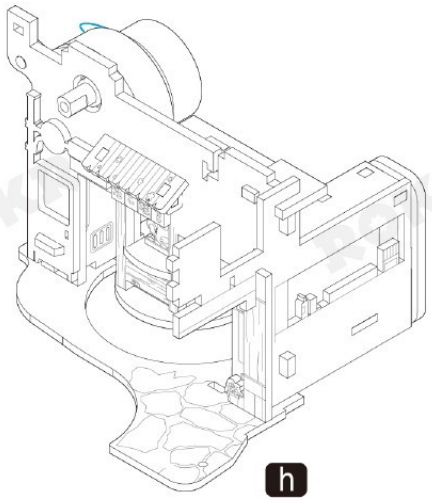

9

A70 x4
E15 x2
3 P19
3 P20
3 P21
P32 Z5

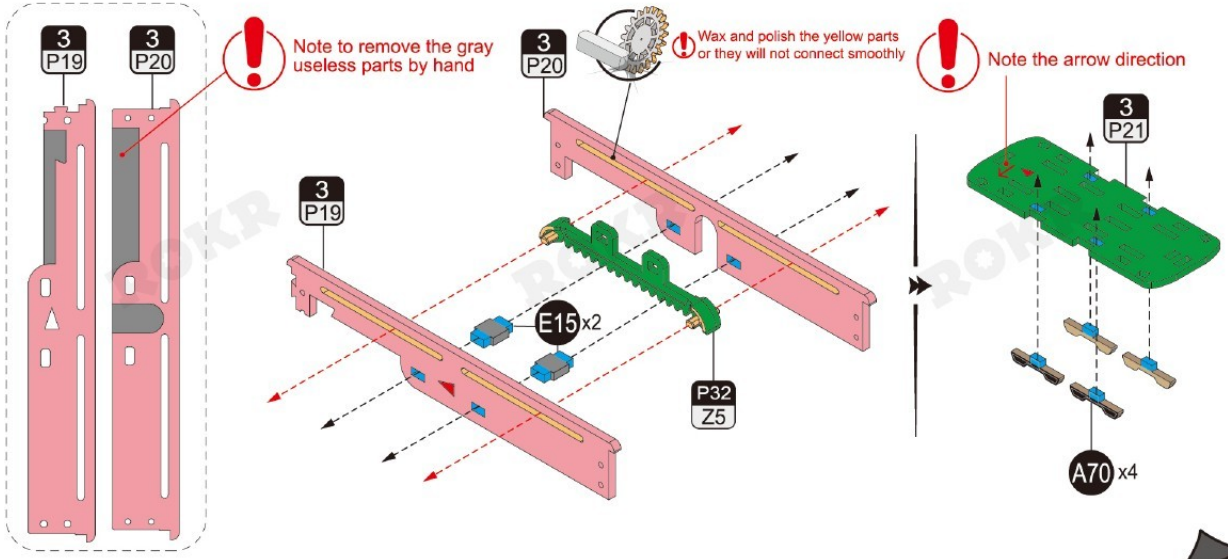

B13
D19
J34 x2

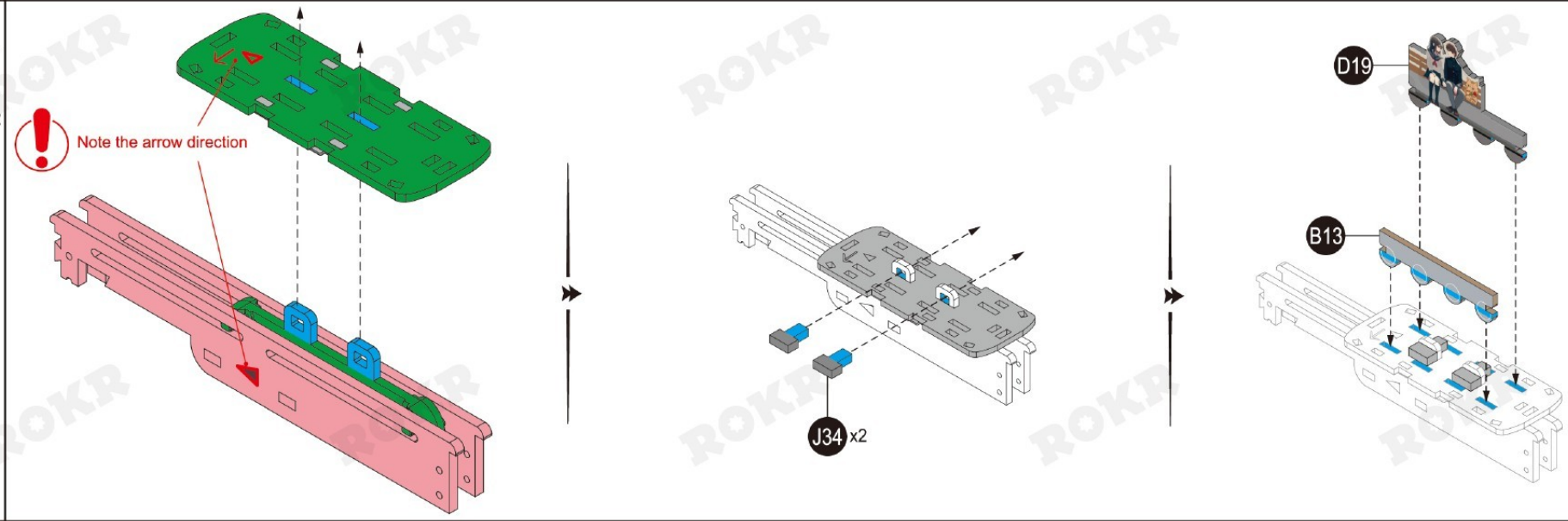

B6 x2
B12
B18
B19
D20

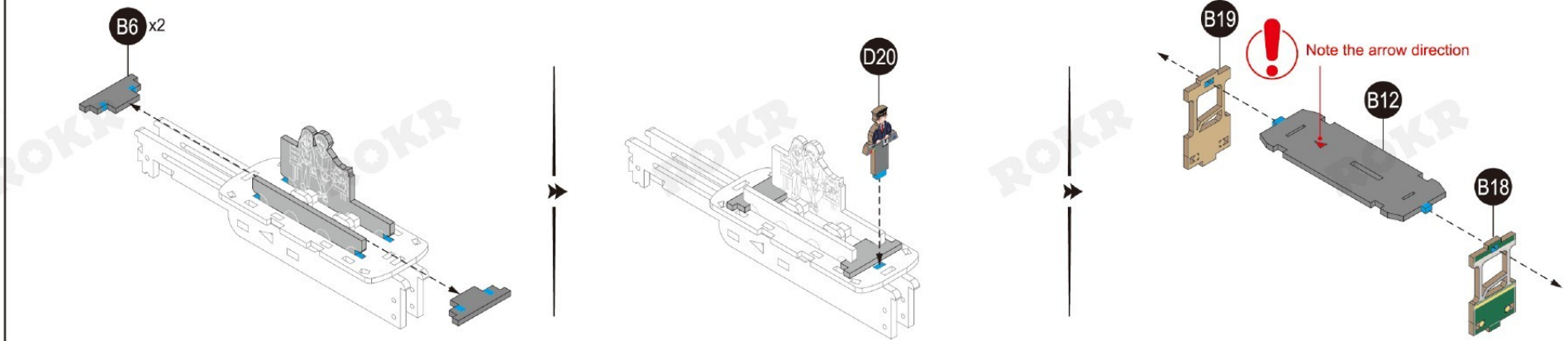

B15 x2

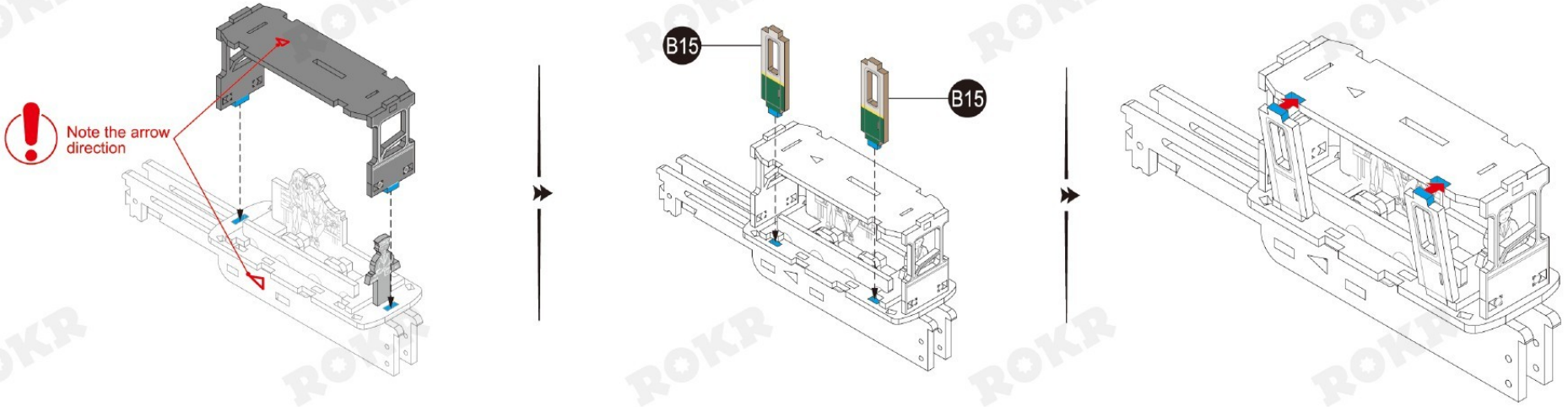

B15 x2
B16
B17

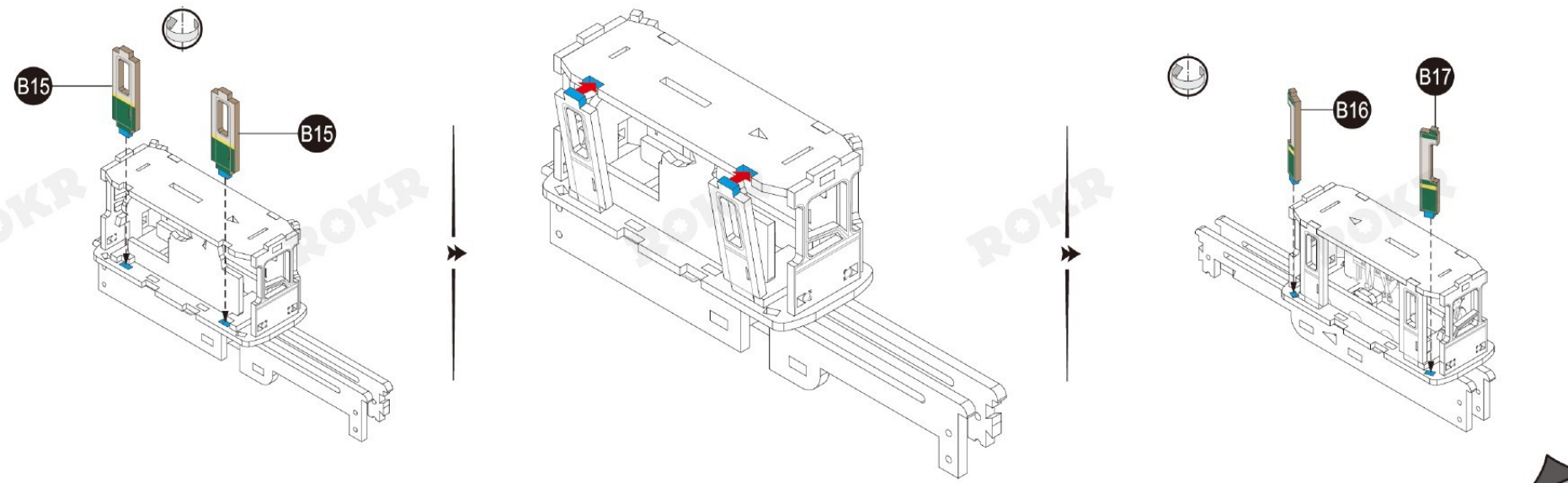

B16
B17
B21
P32
Z1

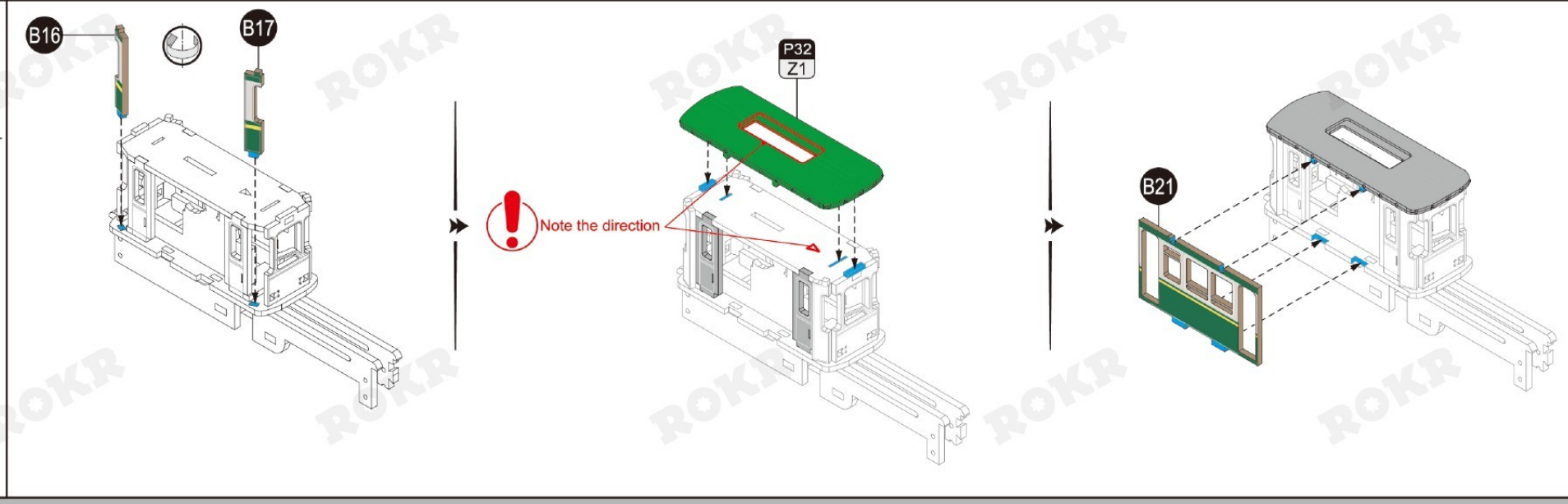

A40
A78
B7
B20

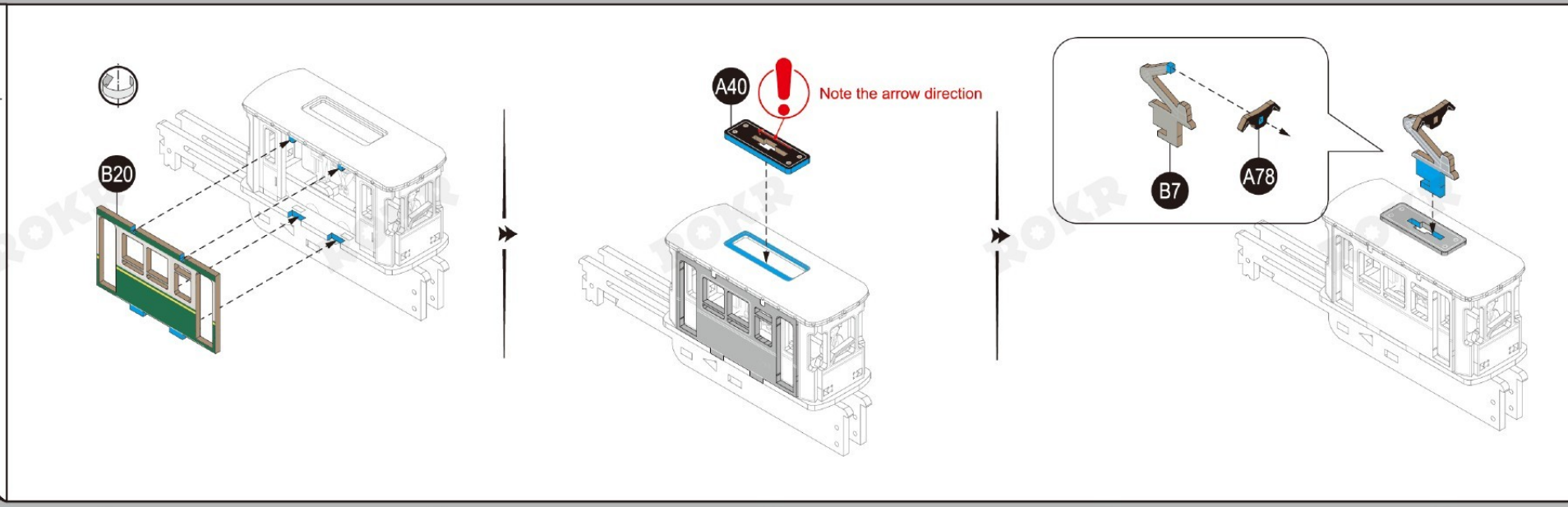

B10
B11
B22

Gently push in the direction of the arrow

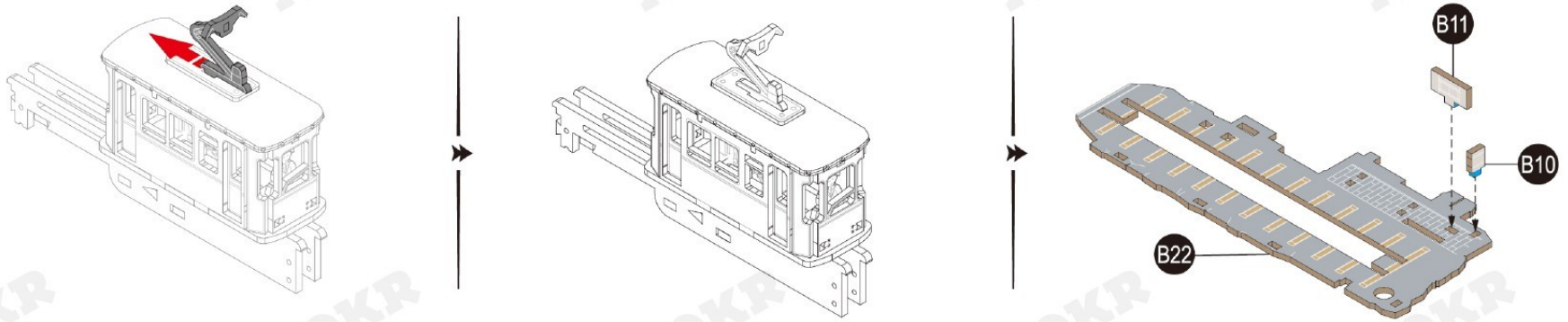

A68 x2
A71

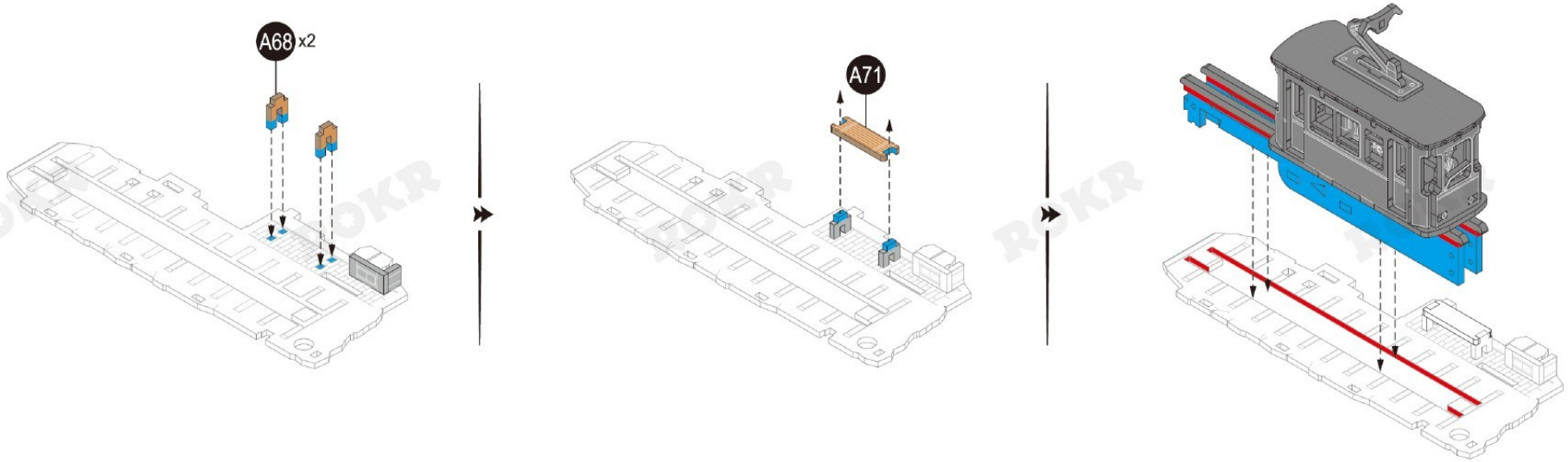

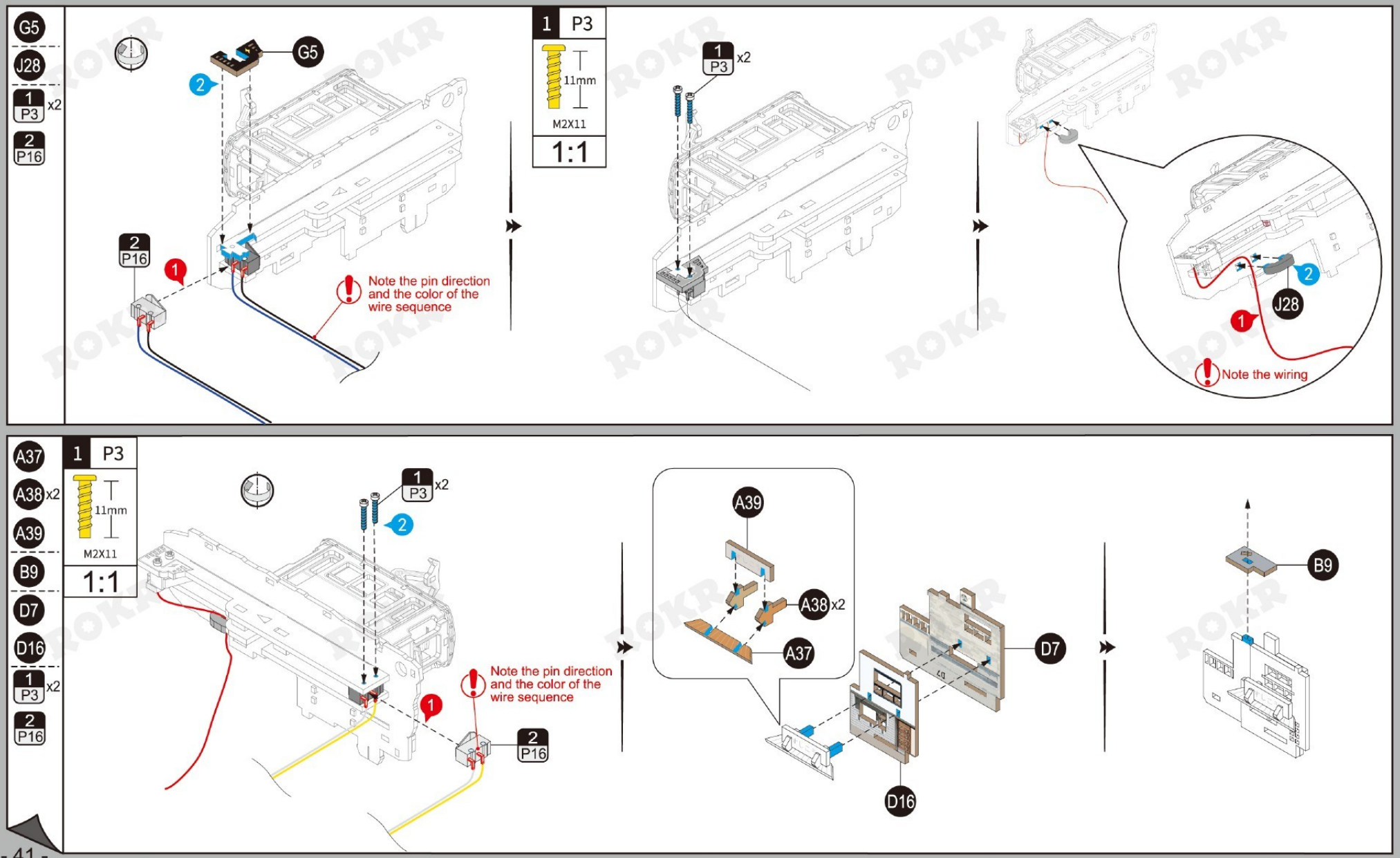
G5
J28
1 P3 x2
2 P16
G5
2
2 P16
1
Note the pin direction and the color of the wire sequence
1 P3
11mm
M2X11
1:1
1 P3 x2
J28
Note the wiring
A37
A38 x2
A39
B9
D7
D16
1 P3 x2
2 P16
1 P3
11mm
M2X11
1:1
1 P3 x2
2
1
Note the pin direction and the color of the wire sequence
2 P16
A39
A38 x2
A37
D7
D16
B9

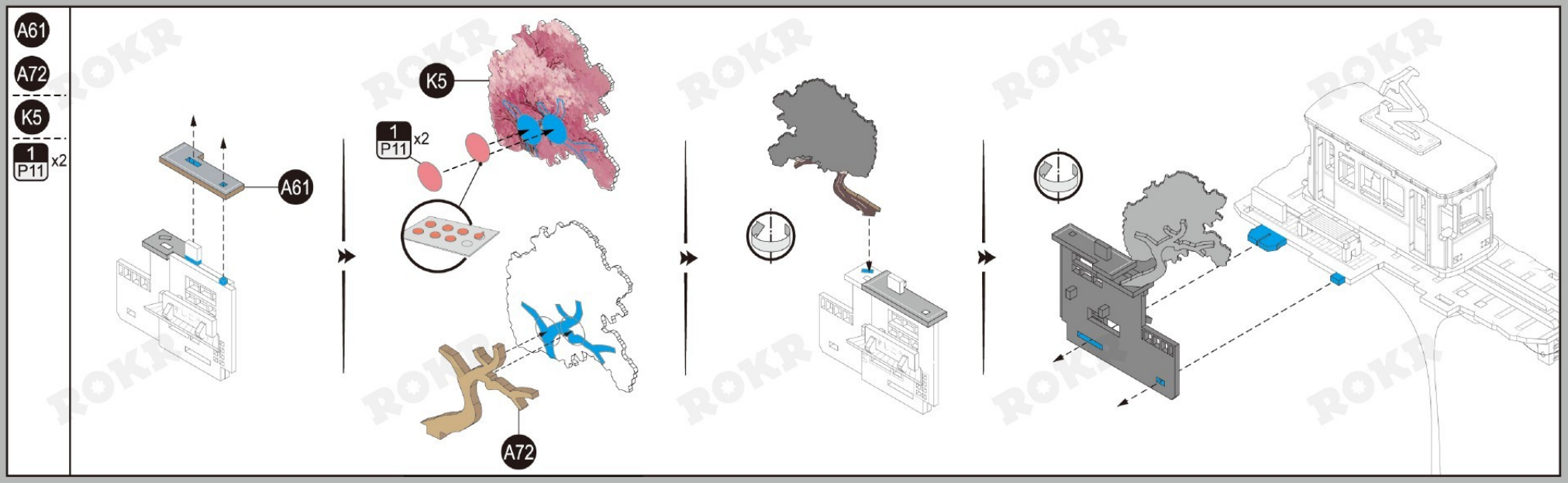
A61
A72
K5
1
P11
x2
A61
K5
1
P11
x2
A72

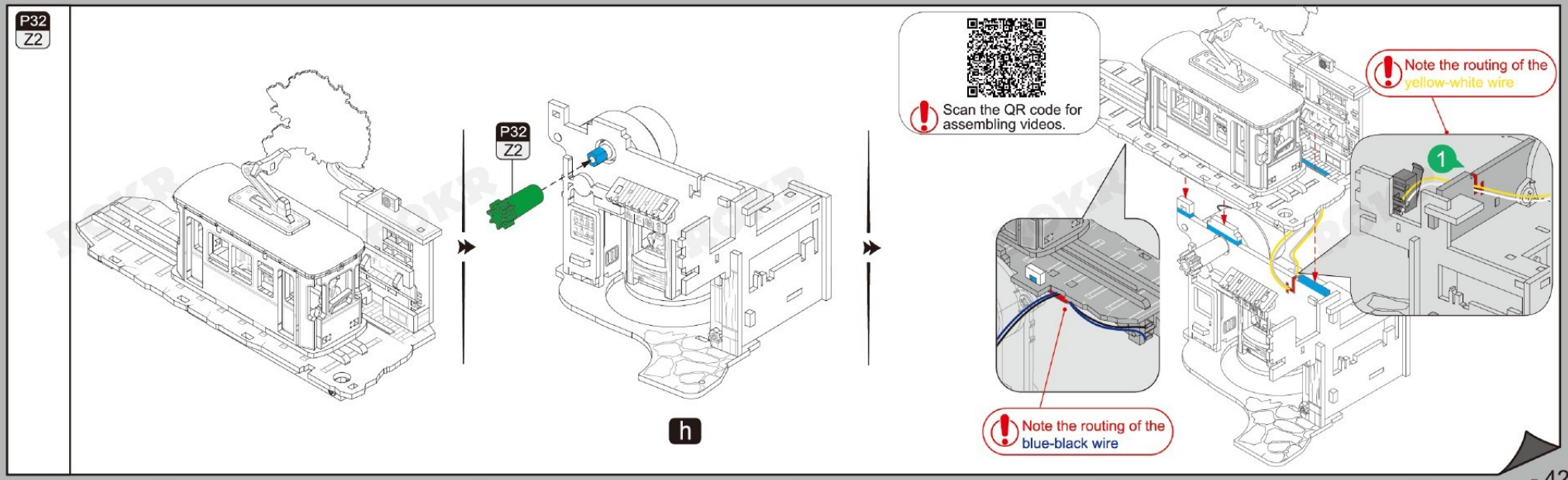
P32
Z2
P32
Z2
h
Scan the QR code for assembling videos.
Note the routing of the yellow-white wire
1
Note the routing of the blue-black wire

B4
B24
D44
G7
G8
G9

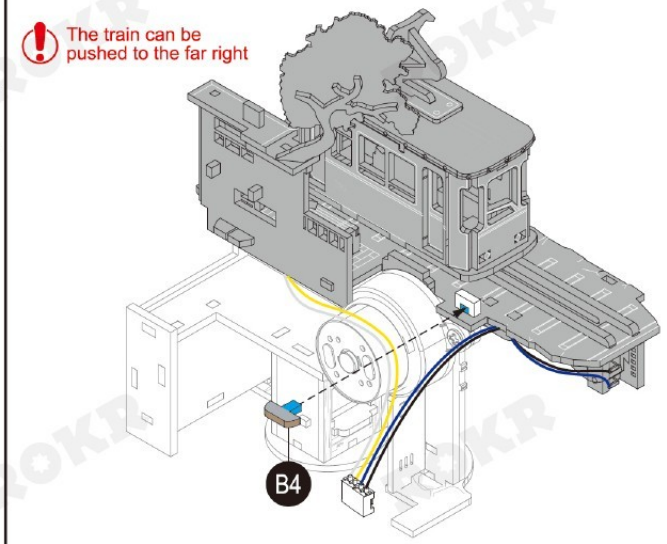

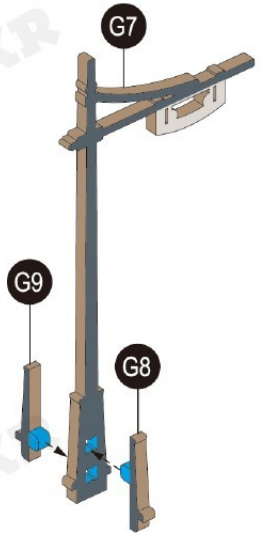



G11

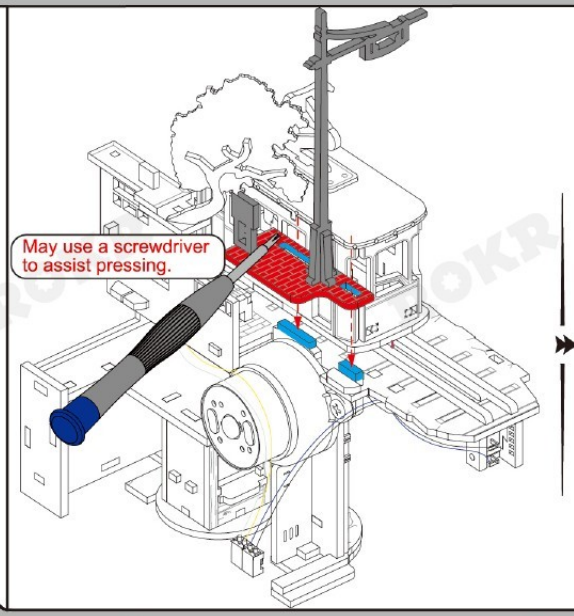

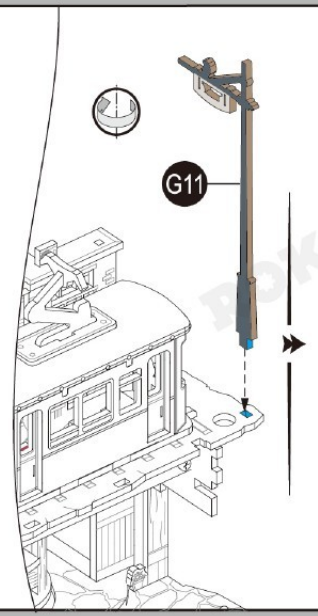

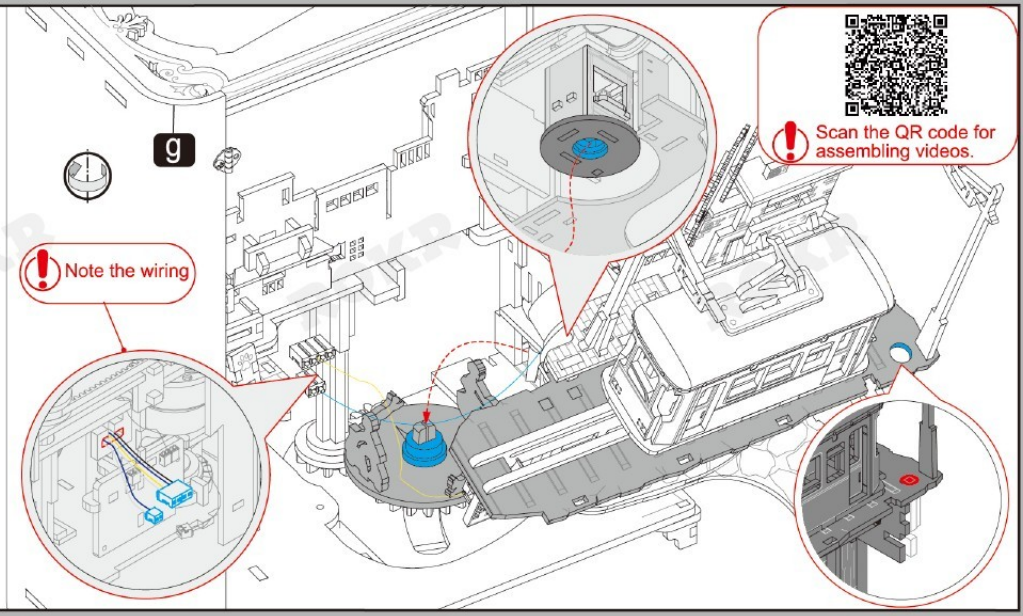

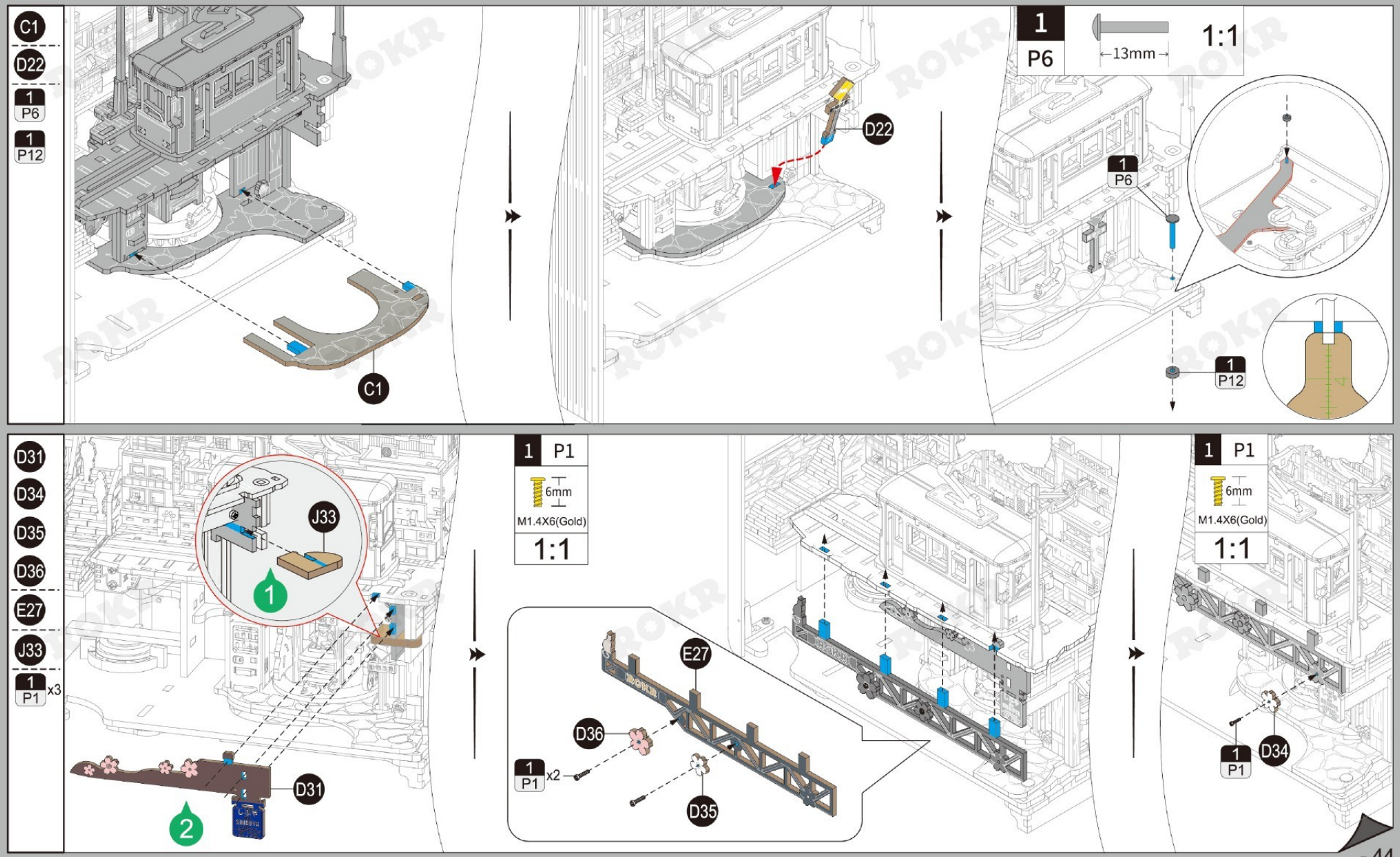
C1
D22
1 P6
1 P12
C1
D22
1 P6
13mm
1:1
1 P6
1 P12
D31
D34
D35
D36
E27
J33
1 P1 x3
J33
1
D31
2
1 P1
6mm
M1.4X6(Gold)
1:1
E27
D36
1 P1 x2
D35
1 P1
6mm
M1.4X6(Gold)
1:1
1 P1
D34

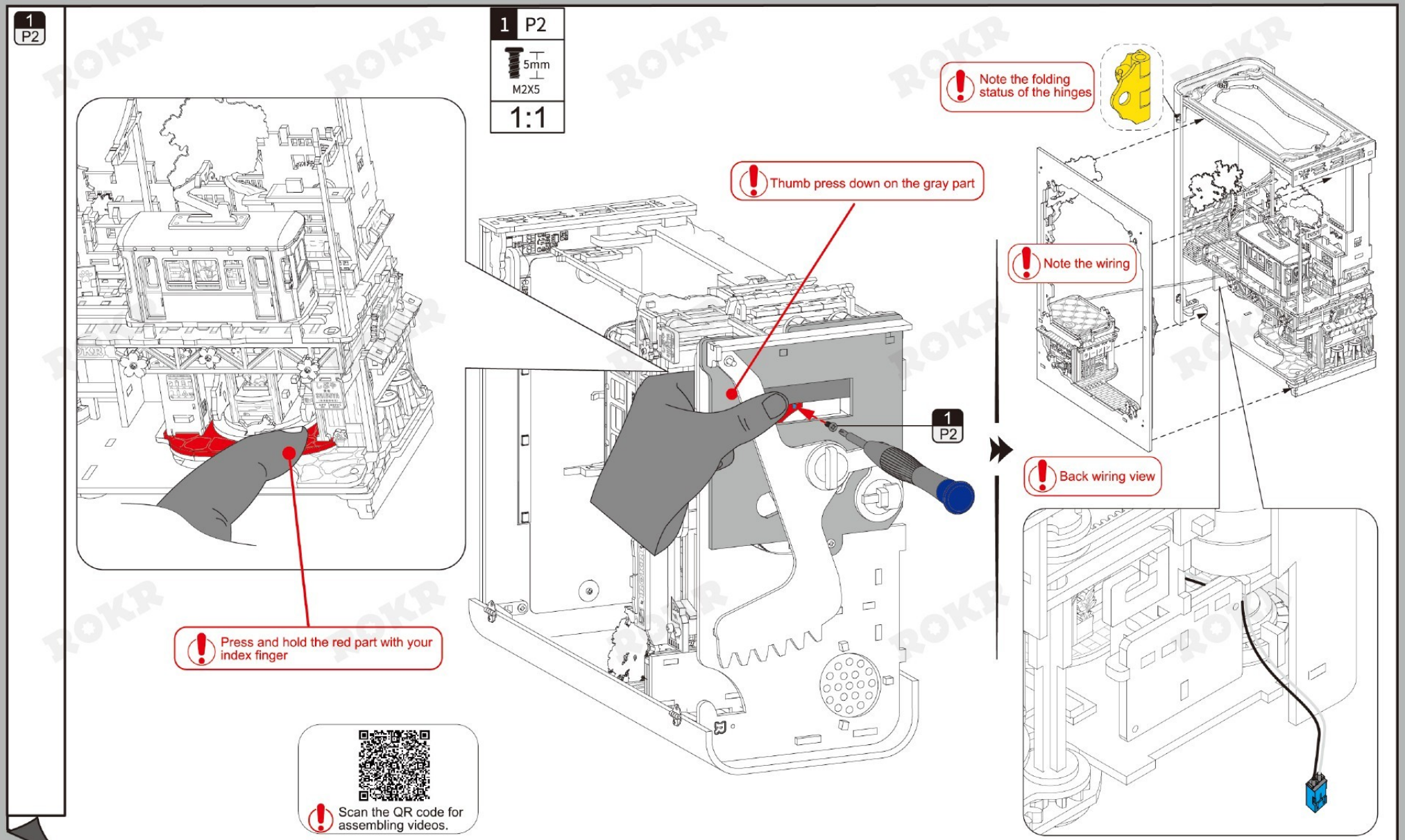
1
P2
1 P2
5mm
M2X5
1:1
Note the folding status of the hinges
Thumb press down on the gray part
Note the wiring
1
P2
Back wiring view
Press and hold the red part with your index finger
Scan the QR code for assembling videos.

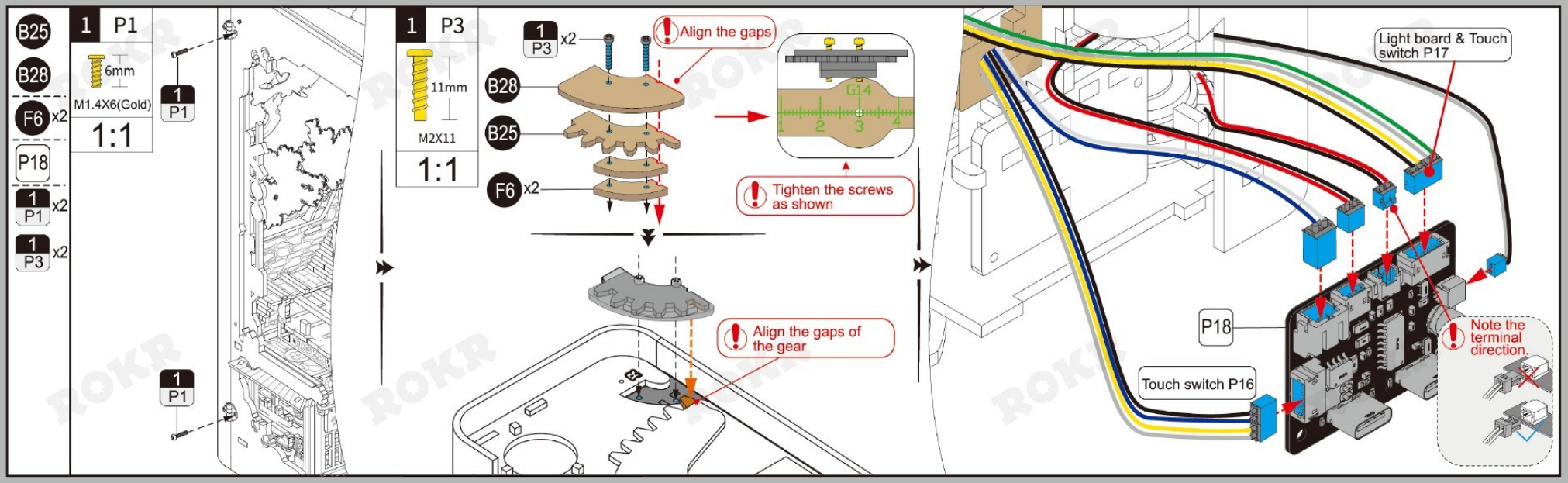

Function test

1. Ensure that all plug terminals are well connected to the corresponding ports on the main control board.
2. Single click on the **touch switch** at the top of the product and observe the normal operation of the motor, horn and light board.
3. Single click the **touch switch** at the top of the product again, the horn music stops, and other components run normally.
4. Long press the **touch switch** on the top of the product, all components stop operating.

Touch switch position

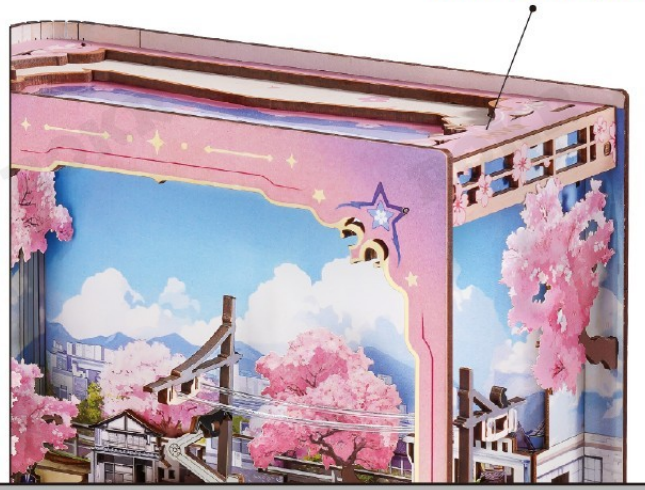

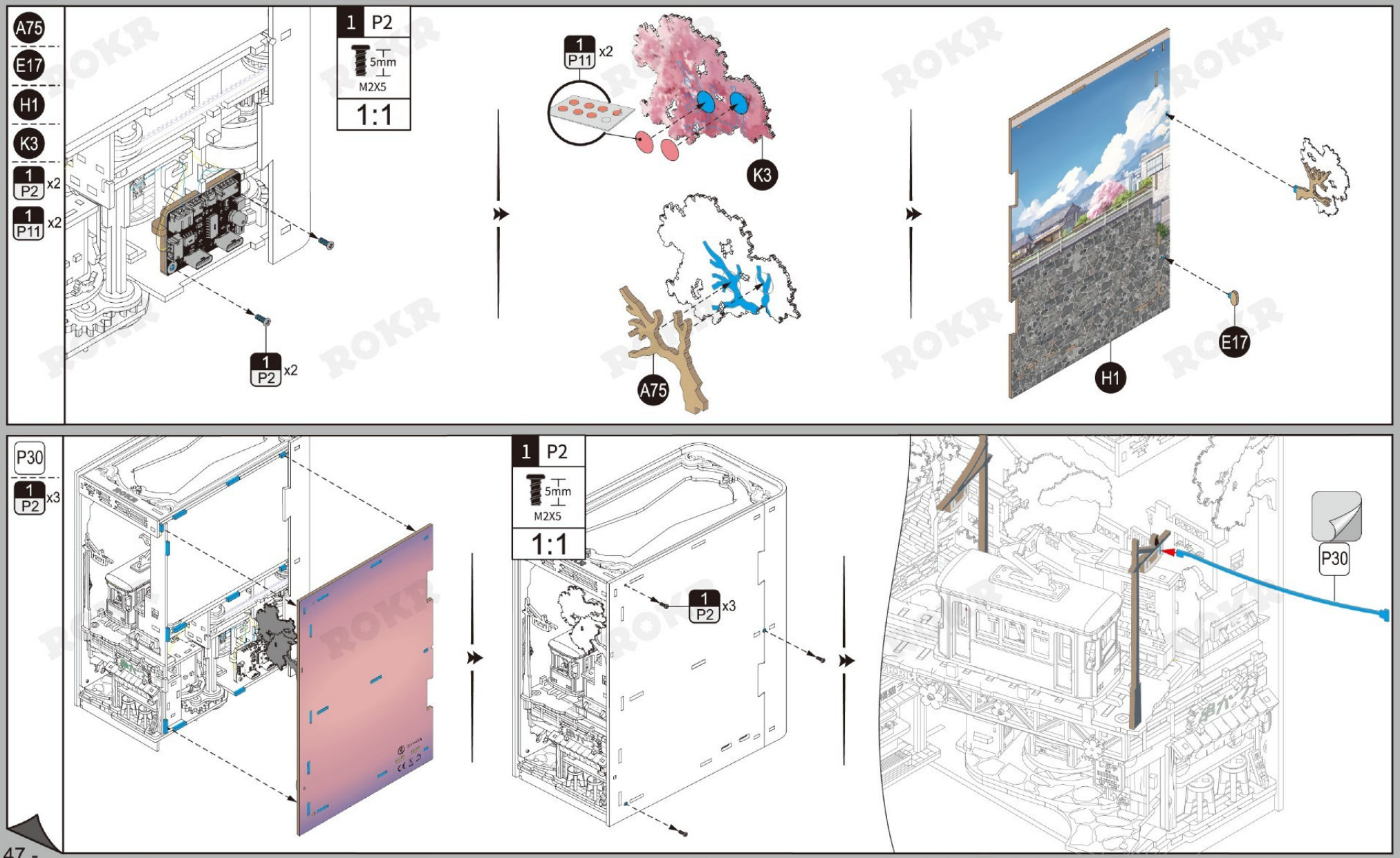
A75
E17
H1
K3
1 P2 x2
1 P11 x2
1 P2
5mm
M2X5
1:1
1 P11 x2
K3
A75
E17
H1
P30
1 P2 x3
1 P2
5mm
M2X5
1:1
1 P2 x3
P30

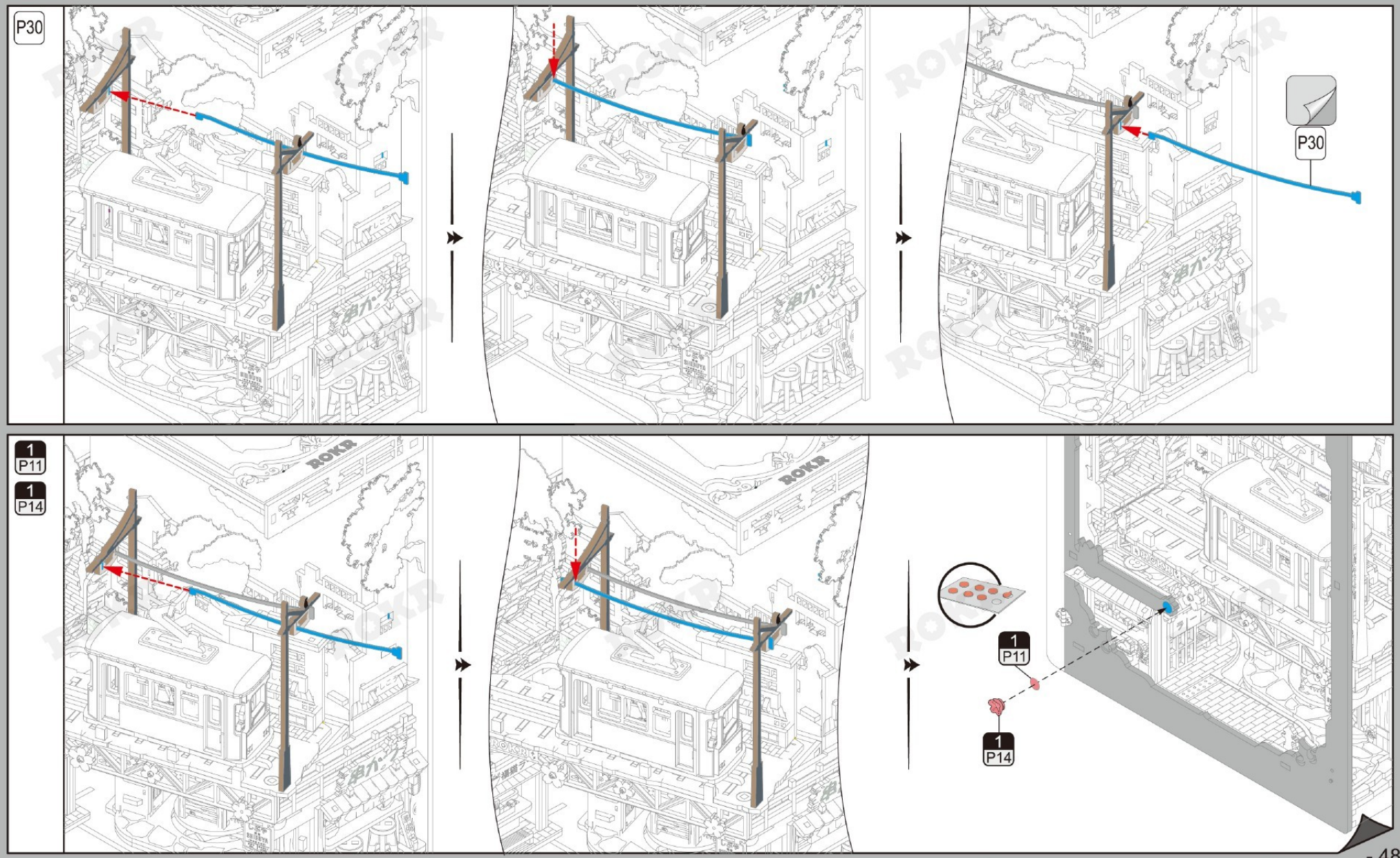
P30
P30
1
P11
1
P14
1
P11
1
P14

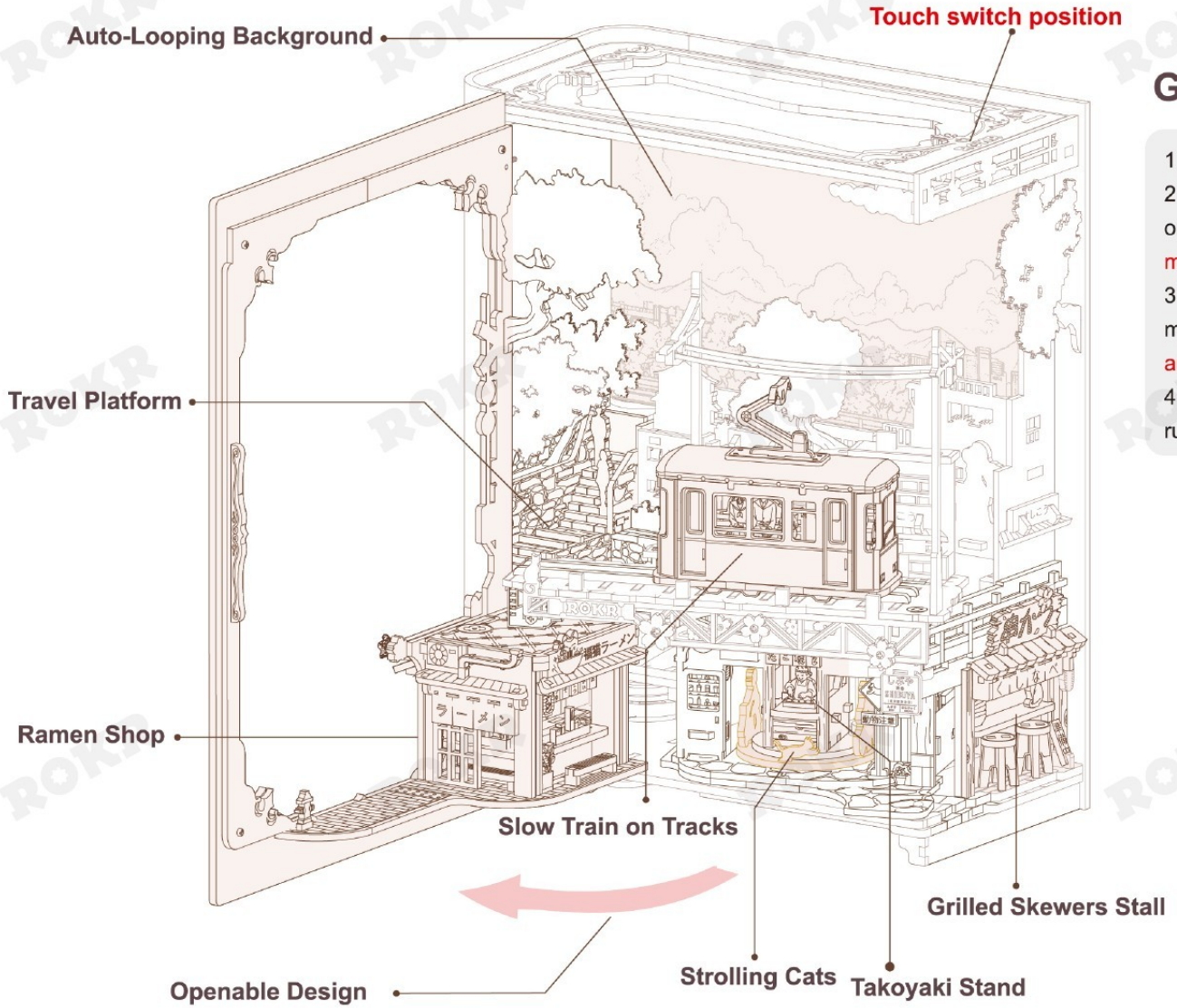

Gameplay Introduction

1. Connect power supply.
2. Normal mode: Single click the touch switch to power on the product. (Automatically stops after running for ten minutes).
3. Silent mode: Single click the touch switch again, the music stops. (Automatically stops after running for half an hour).
4. Long press the touch switch, the product stops running.

Product Display



Closed Static Display



Opened Static Display

ROKR

ROKR Facebook

www.robotime.com

49.1LKS01.100