ASSEMBLY INSTRUCTION FOR ACME FURNITURE MODEL# BD00647

Thank you for purchasing this quality product. Be sure to check all packing material carefully for small parts which may have come loose inside the carton during shipment. Separate, identify and count all parts and hardware.Compare with the part list to be sure all parts are present. If any part(s) are missing or damaged, please contact your local furniture dealer. For efficient and speedy service, please indicate the model number and code letter of part(s) needed”

"DO NOT TIGHTEN SCREWS UNTIL COMPLETELY ASSEMBLED"

IMPORTANT:
PLEASE READ INSTRUCTION BEFORE STARTING THE ASSEMBLY

HARDWARE LIST

ITEM	DESCRIPTION	DRAWING	SIZE	QTY
A	JCBC SCREW		M6 x 16MM	8 PCS
B	FLAT WASHER		M6 x 19MM	8 PCS
C	METAL SUPPORT LEG		-	4 PCS
D	L - KEY		M4 x 65MM	1 PC
E	TIPPING RESTRAINT *Located in the 1st Drawer		-	1 SET

PART LIST

ITEM	DESCRIPTION	DRAWING	QTY
1	DRESSER		1 PC
2	CENTRE SUPPORT LEG		1 PC

Attention

*** Some number parts listed on the instruction sheet may not be in parts bag as they may already be assembled. Carefully check parts and packing materials prior to ordering replacements.

ASSEMBLY INSTRUCTION FOR ACME FURNITURE
MODEL# BD00647

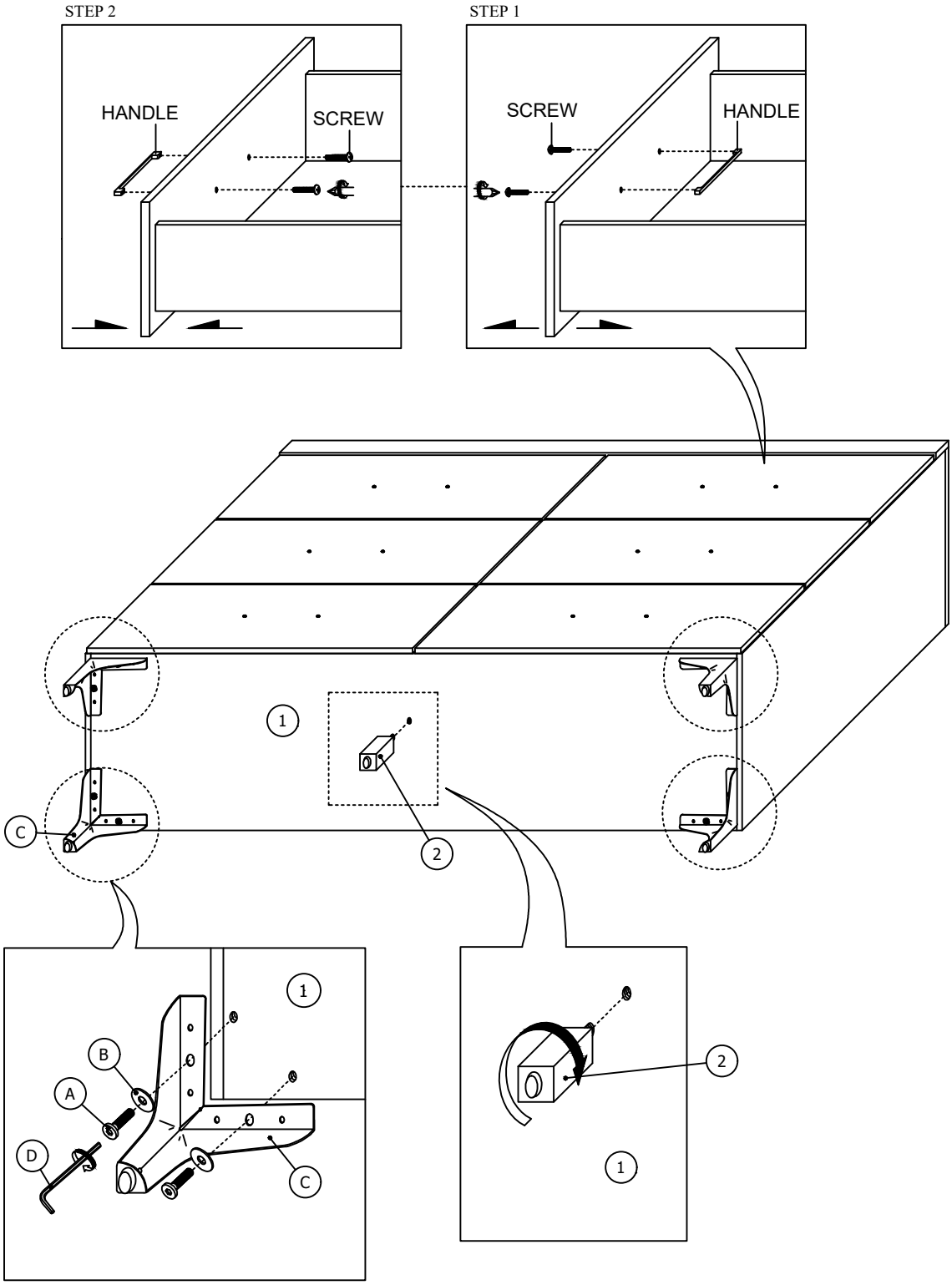

ASSEMBLY
COMPLETED

ASSEMBLY INSTRUCTION FOR ACME FURNITURE
MODEL# BD00647

ANTI-TIPPING INSTALLMENT INSTRUCTIONS

FURNITURE TIPPING RESTRAINT

WARNING

Injury may result from tipping furniture.
This restraint may protect against tipping furniture.
Do not allow children to climb on furniture.
This restraint is not a substitute for proper adult supervision.
Failure to detach this restraint before moving the furniture may result in injury and damage.
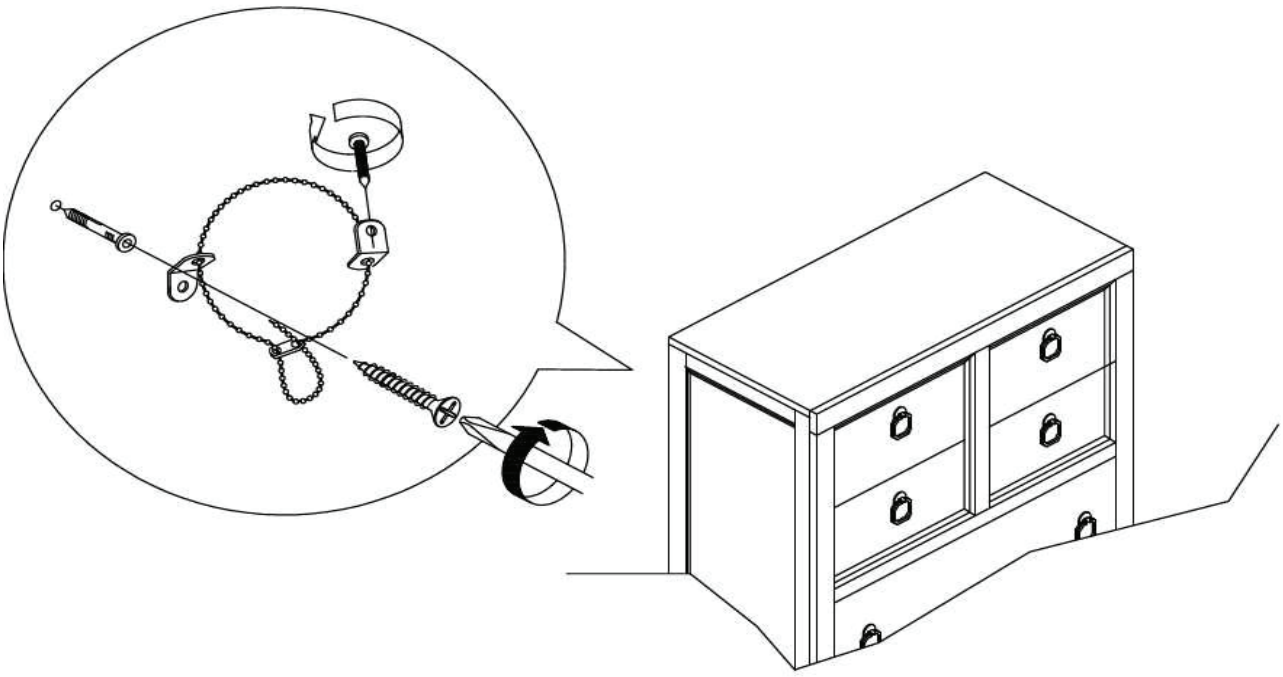
1. Attach one of the mounting brackets securely to the back edge of the furniture. Use the short screw.
2. Determine where the furniture is to be placed and mark location on the wall for the mounting bracket screw hole approximately 2" below the bracket mounted to the edge of the furniture.
3. Drill a 3/16" hole in the wall. Press the plastic wall plug into the hole and gently tap until the flange on the wall plug is against the wall surface.
4. Position the bracket over the wall plug and use the long screw to securely attach the bracket to the wall.
5. Place the furniture so the bracket on the back edge is in line with the bracket on the wall.
6. Lace an end of the cable tie down through each bracket. Bring both ends together and slide the beaded end of the cable tie through the keyhole shaped slot on the other end until snug. Pull down on the beaded end until it snap locks into the keyhole slot.
7. To double lock return the beaded end back through the keyhole as shown.
8. Check to make sure the cable tie is securely laced and locked to the brackets.