Solar charger inverter

User Manual

Product Type

ISolar-SMX-II-5.6KW

Important Safety Instruction

Please maintain the manual for reference in the future

The manual comprises all safety, installation and operation instruction for ISolar-SMX-II Solar Energy Storage and Inverting Control solar charge inverter.

Before installation and use, please carefully read all instructions and notices in the manual.

- There is unsafe voltage inside the Solar charge inverter. In order to avoid personal injury, the user shall not dismantle the machine by himself. To repair the machine, it is required to contact the company's professional maintenance personnel.
- Do not place the Solar charge inverter in the reach of children.
- The Solar charge inverter has the protection grade of IP20, which belongs to indoor application products. It is strictly prohibited to use outdoors,because there is no warranty for outdoor use damage.
- Do not install the Solar charge inverter in a humid, oily, inflammable, explosive or dusty environment.
- Municipal power input and AC output are high voltage, please do not touch the wire.
- The Solar charge inverter in working is very hot, so please do not touch the machine.
- Please don’t open the terminal protection cover of the Solar charge inverter in working.
- It is recommended to install appropriate fuse or circuit breaker outside the Solar charge inverter.
- Make sure to disconnect the fuse or circuit breaker close to the photovoltaic array, mains supply and battery terminals before installing and adjusting the wiring of the integrated machine.
- Check whether all wires are connected firmly after installation to avoid danger of heat accumulation due to virtual connection.
- The Solar charge inverter is the off grid type. It is required to confirm that the Solar charge inverter is the unique power supply input device for the load device. It is forbidden to use the machine in parallel with other input AC power to avoid damage.

Table of Contents

1. Basic Information 4

1.1 Product overview and characteristics 4
1.2 Basic system introduction 5
1.3 Product characteristics 6
1.4 Dimension drawing 7

2. Installation Instruction 8

2.1 Installation notice 8
2.2 Wire specification and breaker type 9
2.3 Installation and Wiring 10

3.Operating Mode 15

3.1 Charge mode 15
3.2 Output mode 16

4. Operation Instruction for LCD Screen 17

4.1 Operation and display panel 17
4.2 Introduction to operation keys 17
4.3 Introduction to indicator light 18
4.4 Introduction to LCD screen 18
4.5 Setting parameter 21
4.6 Battery type parameters 26

5.Other Function 28

5.1 Dry node function 28
5.2 RS485 communication function 29
5.3 USB communication function 29

6.Protection 29

6.1 Protection function 29
6.2 Meaning of fault code 30
6.3 Some fault troubleshooting 31

7.System Maintenance 32

8. Technical Parameter 33

1. Basic Information

1.1 Product overview and characteristics

ISolar-SMX-II series is a new type of mixed solar energy storage inverting & control Solar charge inverter integrating solar energy storage & municipal power charge storage and AC sine wave output. It adopts DSP control and advanced control algorithm to achieve characteristics of high response speed, high reliability and high industrial standard. There are four charge modes namely only solar power, mains power priority, solar power priority, mains power & solar power; and two optional output modes, namely inverting and mains power to meet different application needs.

The solar charge module adopts the latest optimized MPPT tracking technology, which can quickly track the maximum power point of the photovoltaic array in any environment to obtain the maximum energy of the solar panel in real time with wide voltage range of MPPT.

AC-DC charge module adopts advanced control algorithm to realize full digital double closed-loop control of voltage and current, with high control accuracy and small volume. Battery can be charged and protected stably and reliably with wide AC voltage input range, full input/output protection function.

DC-AC inverter module based on full digital intelligent design adopts advanced SPWM technology, outputs pure sine wave, converts DC into AC. It is suitable for AC loads such as household appliances, electric tools, industrial device, electronic audiovisual, etc. The product adopts the segment LCD display design to display the operation data and state of the system in real time. The comprehensive electronic protection function ensures that safety and stability of the whole system.

Characteristics:

1. Adopt full digital voltage and current double closed-loop control and advanced SPWM technology to output pure sine wave.
2. Two output modes, i.e. mains bypass and inverter output can achieve uninterrupted power supply function.
3. Four optional charge modes: only solar energy, mains priority, solar energy priority and mixed charge.
4. Advanced MPPT technology, with efficiency up to 99.9%.
5. Wide MPPT voltage range.
6. With function of activating lithium battery with solar energy and AC mains power, it supports connection of lead-acid battery and lithium battery.
7. LCD screen design and 3 LED indicator lights dynamically display system data and operation states.
8. ON/OFF rocker switch can control AC output.
9. With power saving mode function, it can reduce no-load loss.
10. Intelligent adjustable speed fan is adopted for efficient heat dissipation and extended system life.
11. Possessing multiple protection functions and 360° comprehensive protection.
12. Possessing complete short circuit protection, overvoltage and undervoltage protection, overload protection, back filling protection, etc.

13. It has the function of mixed load: when the battery is not connected, photovoltaic and commercial power can supply power to the load at the same time (if there is no battery, the commercial power must be connected). When the battery is full, it can also enter the mixed load mode, which can make full use of the photovoltaic energy.

1.2 Basic system introduction

The figure below shows the system application scenario of this product. A complete system includes the following parts:

1. Photovoltaic module: convert the light energy into direct current energy and then charge the battery via the Solar charge inverter, or directly invert the light energy into alternating current to supply power to the load.
2. Mains or generator: connected at the AC input, it can supply power to the load and charge the battery at the same time. If no mains power or generator is connected, the system can also operate normally. At this time, the load power is supplied by the battery and photovoltaic modules.
3. Battery: the battery is to ensure the normal power consumption of the system load in case of no sufficient solar energy or mains supply.
4. Household load: it can be connected to various household and office loads, including AC loads such as refrigerators, lamps, televisions, fans, air conditioners, etc.
5. Inverting and control Solar charge inverter: the energy conversion device of the whole system.

The specific system wiring mode is determined by the actual application scenario.

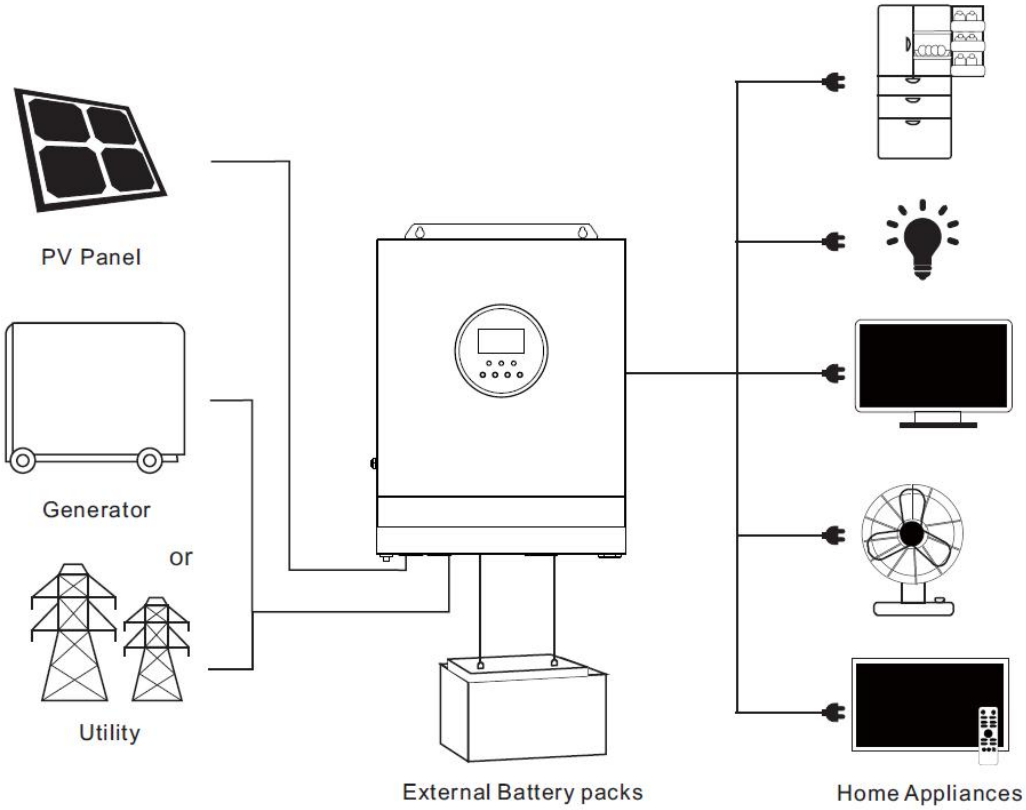

1.3 Product characteristics

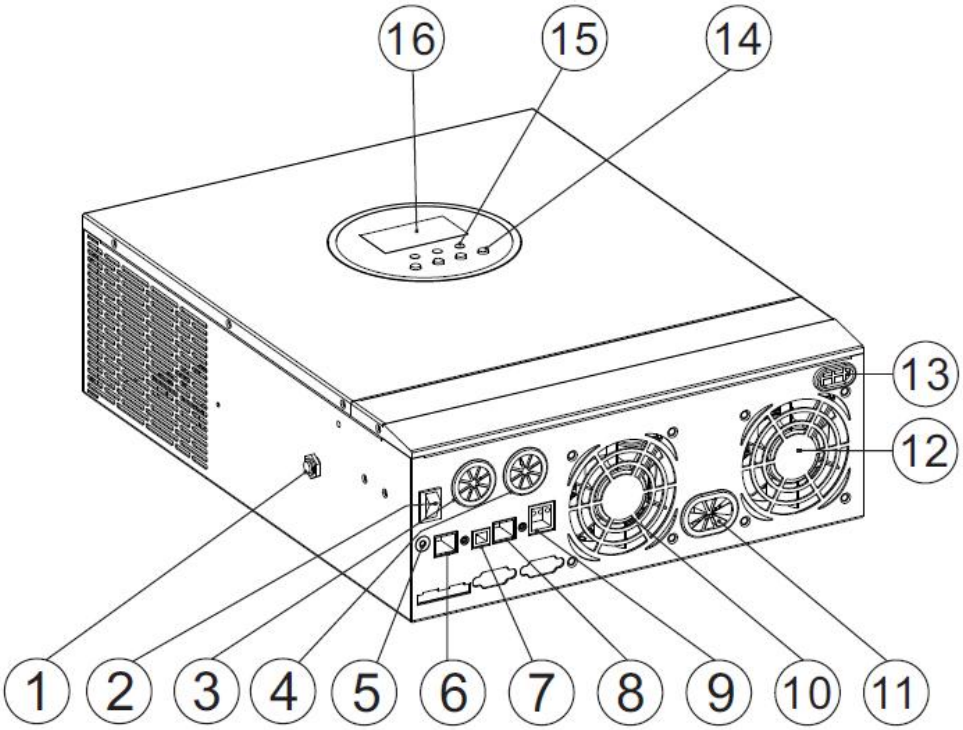

①	Overload protector	⑨	Dry contact port
②	ON/OFF rocker switch	⑩	Cooling fan
③	ACi nput port	⑪	Battery port
④	AC output port	⑫	Cooling fan
⑤	Grounding screw hold	⑬	PV port
⑥	RS485-2 communication port	⑭	Touch the key lightly
⑦	USB communication port	⑮	Indicator light
⑧	RS485-1 communication port	⑯	LCD screen

1.4Dimension drawing

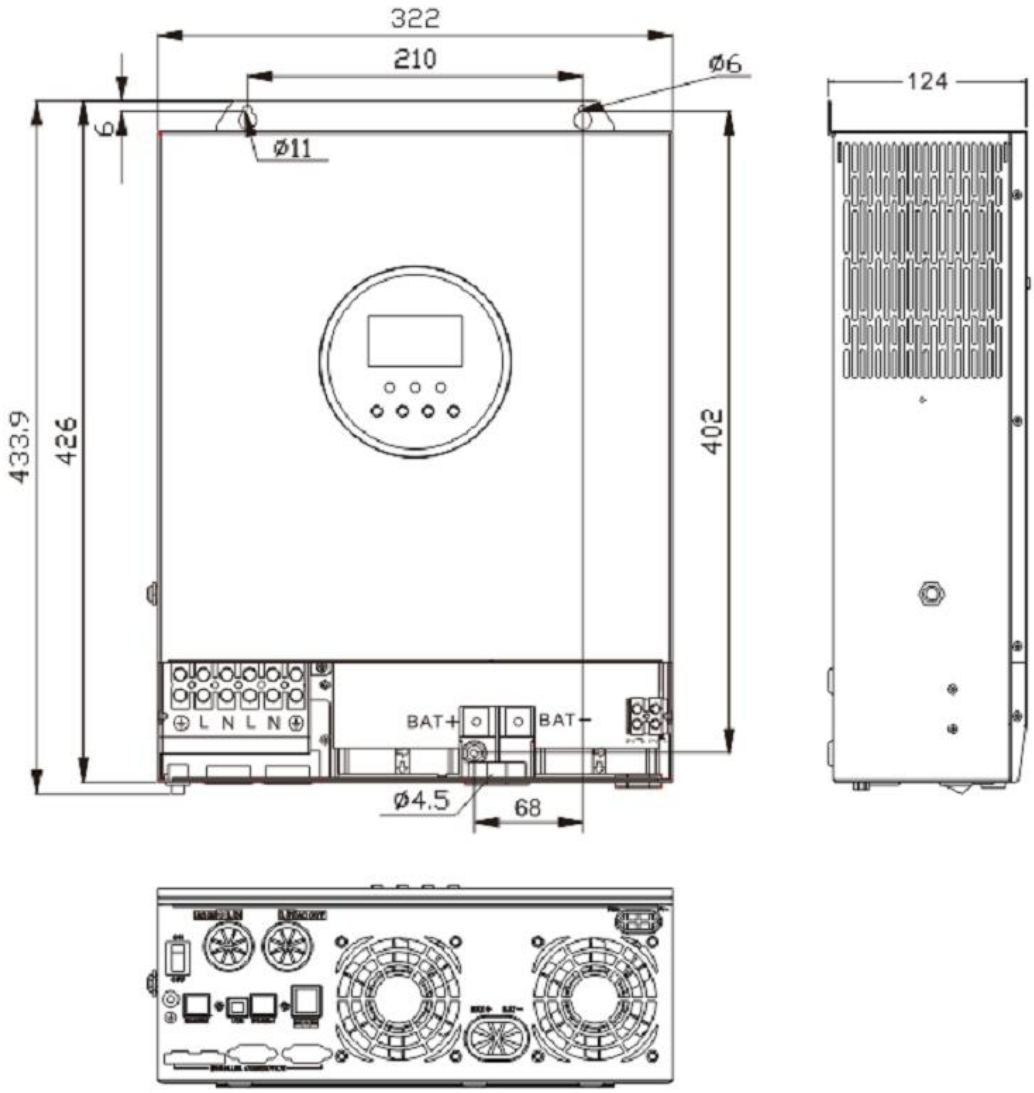

2. Installation Instruction

2.1 Installation notice

Before installation, please carefully read the manual and get familiar with the installation step.

- Take care while installing the battery. When installing the lead-acid liquid battery, it is required to wear goggles. Any body part contacting the battery acid must be washed with clear water in time.
- Don ' t place any metal object beside the battery to prevent short circuit of the battery.
- Acid gas may be generated during battery charge. Therefore, it is required to ensure good ventilation around the environment.
- During cabinet installation, sufficient space shall be reserved around the Solar charge inverter for heat dissipation; do not install the Solar charge inverter and lead-acid liquid battery in the same cabinet to avoid the corrosion of the Solar charge inverter by acid gas generated during battery operation.
- Only the battery with type consistent with the Solar charge inverter can be charged.
- Loose connection points and corroded wires may cause great heat, thereby melting the insulation layer of wires, burning the surrounding materials, or even causing fire. Therefore, all connectors must be tightened, and the wires must be fixed with ties, so as to avoid the looseness of connectors caused by wire shaking during mobile application.
- Tie conductors are selected based on no greater than $5A/mm^2$ current density.
- The machine installed outdoors shall be protected against direct sunlight and rain.
- After the power switch is turned off, there is still high voltage inside the Solar charge inverter. Please do not open or touch the internal components, and carry out relevant operation after the capacitor is fully discharged.
- Please do not install the Solar charge inverter in a humid, greasy, flammable, explosive or dusty or other severe environments.
- The polarity of the battery input end of this product shall not be reversed, otherwise the device may be damaged easily or there may be some unpredictable dangers.
- AC supply input and AC output are both high voltage, so please do not touch the wires.
- Do not touch the fan in working to prevent injury.
- It is required to confirm that the Solar charge inverter is the unique power supply input device for the load device. It is forbidden to use the machine in parallel with other input AC power to avoid damage.

2.2 Wire specification and breaker type

For wiring and installation ways,it is required to observe national and local electrical specification requirements.

Recommended wiring specification and breaker type for photovoltaic array: the output current of the photovoltaic array is affected by the form, connection way and illumination angle of photovoltaic array, therefore the minimum wire diameterof the photovoltaic array is calculated based on the short circuit currentof photovoltaic array. Please refer to the short circuit current value in the specification of photovoltaic array (the short circuit current keeps unchanged for the photovoltaic arrays in series connection; the short circuit current of photovoltaic arrays in parallel connectioni s the sum of short circuit currentof all components connected in parallel); the short circuit current of the array cannot exceed maximumi nput currentof PV.

- **Please refer to the table below for PV input wire diameter and switch:**

Type	Recommended wire diameter	Maximum PV input current	Recommended types of air switchor breaker
ISOLAR-SMX-II-5.6KW	6mm^2/10AWG	18A	2P—25A

Note: the voltage in parallel shall not exceed maximum PV input open-circuit voltage.

- **Please refer to the table below for recommended AC input wire diameter and switch:**

Type	Recommended wire diameter	Maximum bypass input current	Recommended types of air switchor breaker
ISOLAR-SMX-II-5.6KW	10mm^2/7AWG	40A	2P—40A

Note: there is already a corresponding breaker at input connection point of mains supply. Therefore, no breaker may be equipped.

- **Recommended input wire diameter and switch type for battery**

Type	Recommended wire diameter	Rated battery discharge current	Maximum charge current	Recommended types of air switch or breaker
ISOLAR-SMX-II-5.6KW	30mm^2/2AWG	125A	80A	2P—200A

- **Recommended wire specification and breaker type for AC output**

Type	Recommended wire diameter	Rated inverter AC output current	Maximum bypass output current	Recommended types of air switch or breaker
ISOLAR-SMX-II-5.6KW	$10mm^2$/7AWG	24.3A	40A	2P—40A

Note: the wire diameter is only for reference. In case of long distance between photovoltaic array and Solar charge inverter or between Solar charge inverter and battery, use thicker wire to reduce voltage drop and improve system performance.

Note: above wire diameter and breaker are only for reference. Please select appropriate wire diameter and breaker based on practical condition.

2.3 Installation and Wiring

Installation step:

Step 1: confirm the installation position and heat dissipation space, confirm the installation position of Solar charge inverter, such as wall surface; to install the Solar charge inverter, guarantee there is sufficient air flowing through the cooling fins of Solar charge inverter. At least reserve 200mm space at the left and right air outlets of the Solar charge inverter to guarantee heat loss through natural convection. Refer to the overall installation schematic above.

Warning: danger of explosion! Never install the Solar charge inverter and lead-acid liquid battery into a same sealed space or in a sealed place with probable accumulation of battery gas.

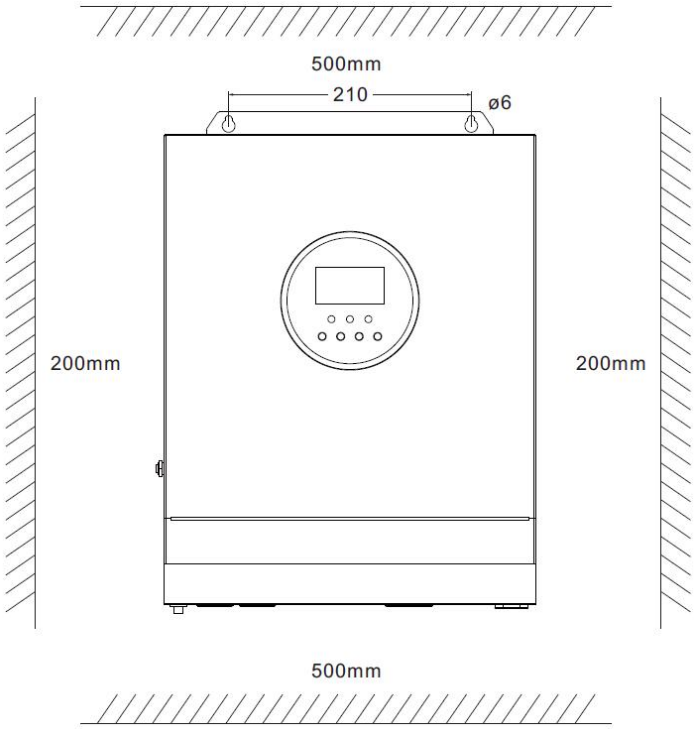

Step 2: Remove the terminal protection cover

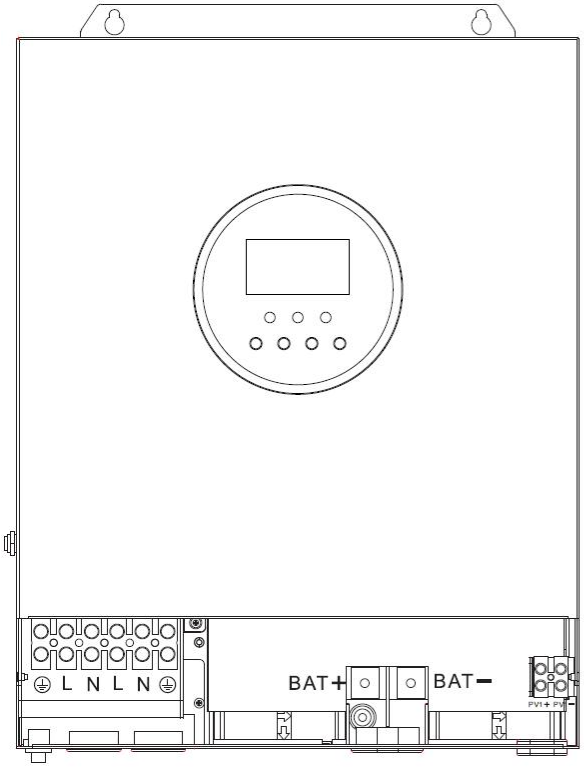

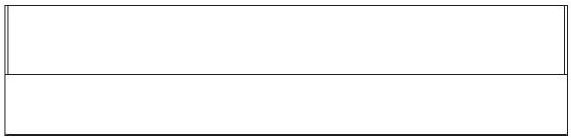

Step 3: wiring

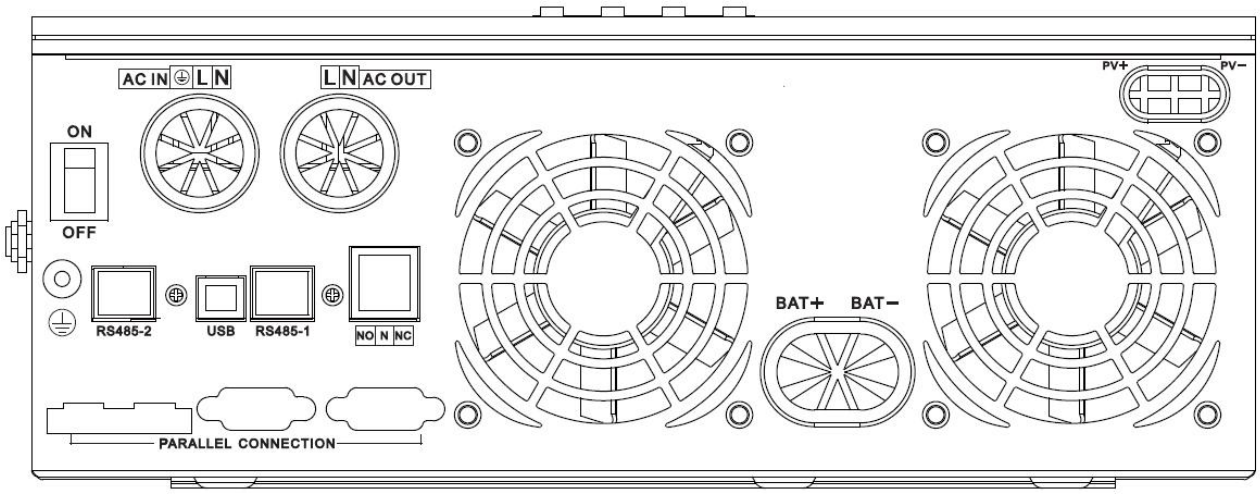

AC input/output wiring method:

① Before AC input/output wiring, disconnect the external breaker at first and then confirm whether the cable used is thick enough. Please refer to chapter “ 2.2 Wiring Specification and Breaker type”;

② Correctly connect AC input wire in accordance with cable sequence and terminal position shown in the figure below. Please connect ground lead at first, and then live wire and mull wire;

⏚: **Ground** **L : Live** **N : Neutral**

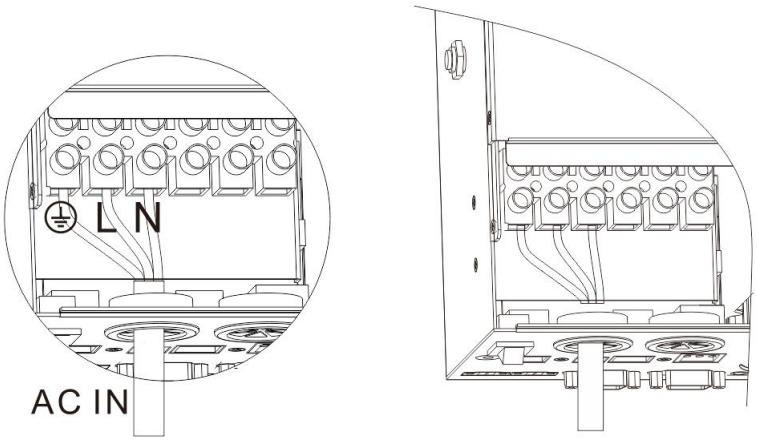

③ Correctly connect AC output wire in accordance with cable sequence and terminal position shown in the figure below. Please connect the ground wire at first, and then live wire and null wire. The ground wire is connected to the ground screw hold through Oshaped terminal.

⏚: **Ground** **L : Live** **N : Neutral**

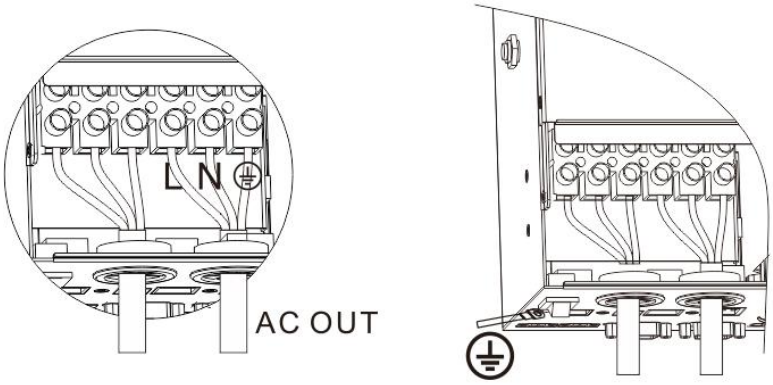

Note: use thick ground cable as far as possible (with cable section not less than 4mm^2), place the ground point to be close to the Solar charge inverter as far as possible and choose shorter ground wire to the greatest extent

Wiring method of PV input:

① Before wiring, disconnect external breaker at first, and confirm whether the used cable is thick enough. Please refer to chapter "2.2 Wiring Specification and Breaker Type";

② Correctly connect PV input wire in accordance with cable sequence and terminal position shown in the figure below.

PV+ positive input pole **PV1- negative input pole**

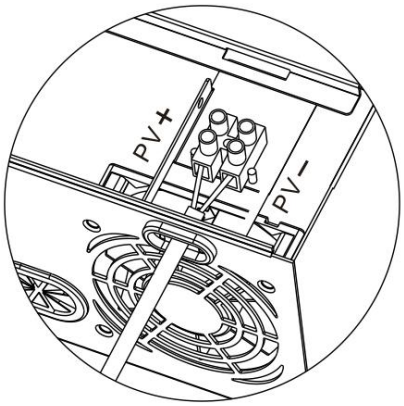

BAT wiring method:

① Before wiring, disconnect external breaker at first, and then confirm whether the used cable is thick enough. Please refer to chapter " 2.2 Wiring Specification and Breaker Type " . BAT wire shall be connected with the machine via O-shaped terminal. It is recommended to use the O-shaped terminal with 5mm inside diameter. The O-shaped terminal must compress BAT wire firmly to prevent excessive heating caused by great contact resistance;

② Correctly connect BAT wire in accordance with cable sequence and terminal position shown in the figure below.

BAT+: positive battery pole **BAT-: negative battery pole**

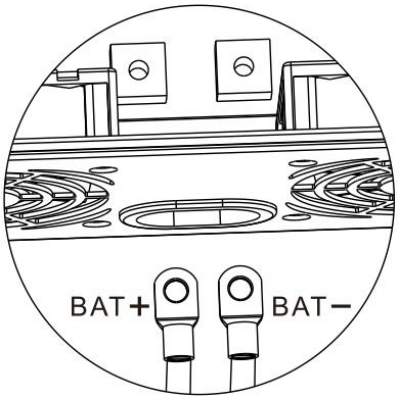

Warning notice:

① Input from mains supply, AC output and photovoltaic array may generate high voltage. Before wiring, make sure to break the breaker or fuse;

② During wiring process, make sure to pay attention to the safety; during the wiring process, please don't close the breaker or fuse. At the same time, guarantee that "+" and "-" poles of different parts are correctly connected with wires; a breaker must be installed at the battery end and selected based on chapter "2.2 Wiring Specification and Breaker Type". Before wiring, make sure to break the breaker to prevent strong electric spark generated during wiring. At the same time, avoid battery short circuit during the wiring process; if the Solar charge inverter is in the area with frequent thunder, it is suggested to install an external arrester at PV input terminal.

Step 4: inspect whether the wires are correctly and firmly connected, especially whether the positive and negative input poles of the battery are correct, whether the positive and negative input poles of PV are correct, whether AC input is inaccurately connected to AC output terminal.

Step 5: install protective cap of terminal

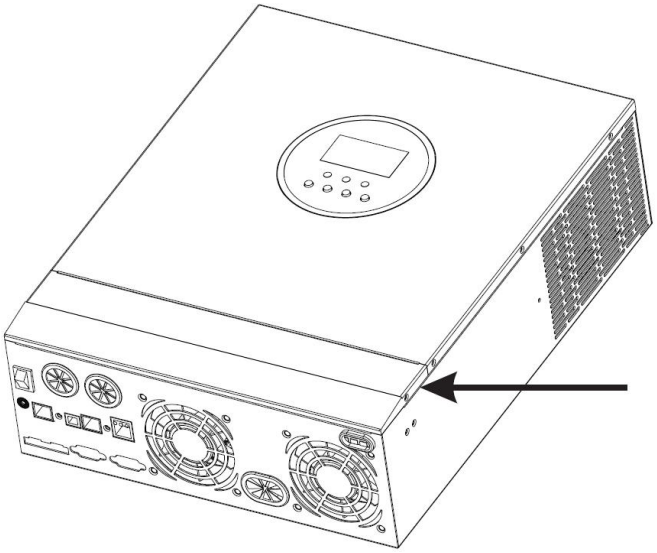

Step 6: Start Solar charge inverter

At first close the breaker at the battery end, and then press the rocker switch at the lower left side of the machine to " ON " state, " AC/INV " indicator light flashes, indicating normal operation of inverter. Afterwards, close breakers of photovoltaic array and mains supply. In the end, after AC output is normal, turn on AC load one by one to avoid protection action generated by great instant impact owing to simultaneous turnon of loads. The Solar charge inverter operates normally in accordance with set mode.

Note: if power is supplied to different AC loads, it is suggested to turn on the loads with great impact current, and then turn on the load with little impact current after the load operates stably.

Note: in case of abnormal operation of Solar charge inverter or abnormal display of LCD or indicator light, refer to Chapter 6 for troubleshooting.

3.Operating Mode

3.1 Charge mode

1. Photovoltaic priority: in photovoltaic priority charge mode, mains charge is started only when photovoltaics is out of work. Make full use of solar energy for power generation in the daytime and transfer to the mains supply for charge to maintain electric quantity of the battery. It is suitable for areas with relatively stable power grid and relatively expensive electricity price.

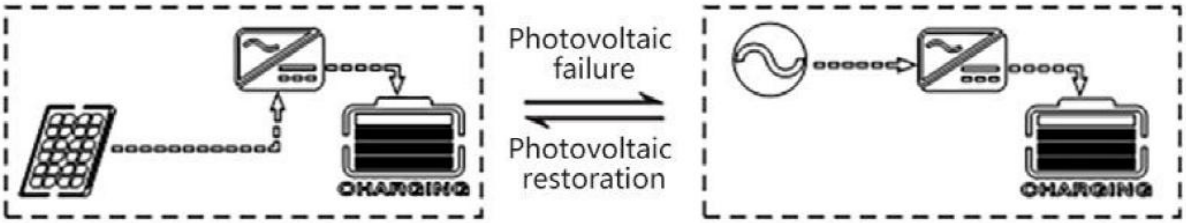

2. Mains supply priority: mains supply is to charge the battery preferentially and the photovoltaic charge can be started only when the mains supply is valid.

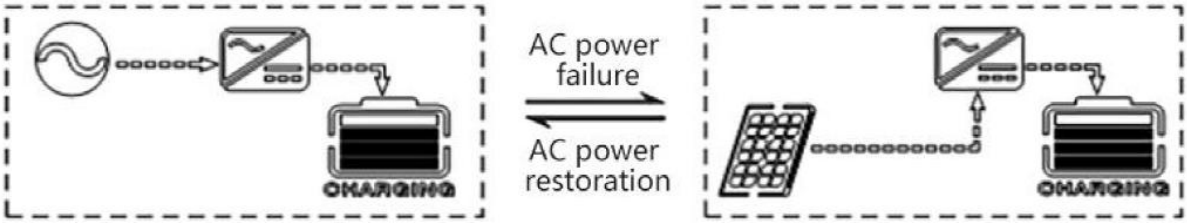

3. Mixed charge: with mixed charge through photovoltaics and mains supply, photovoltaic MPPT charge is used preferentially. In case of insufficient photovoltaic energy, the mains supply is used for supplement. In case of sufficient photovoltaic energy, mains supply stops charge. Electricity can be charged fastest with the way, which is suitable for the area with unstable power grid, so as to supply sufficient backup power supply at any time.

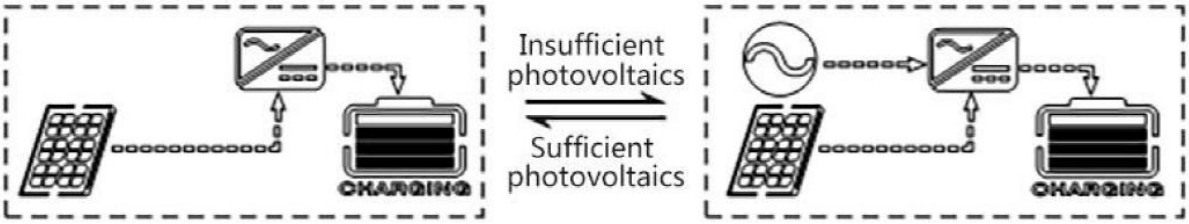

4.Only solar: only photovoltaic charge is used, no mains supply is started. This way can save the energy at most. The electric energies of battery are all from solar energy. This way is suitable for areas with good light condition.

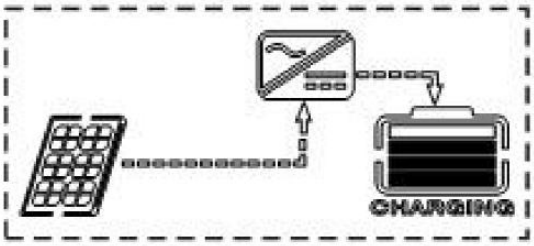

3.2 Output mode

- **Photovoltaic priority mode:** Photovoltaic and battery supply power to the load. With diversified charge mode and optional output mode, when photovoltaic priority mode is selected, the green solar energy can be used as far as possible so as to achieve energy conservation and emission reduction. It switches to mains supply when the photovoltaics is invalid. With the mode, solar energy can be used maximally and electric quantity can be maintained at the same time. Therefore, the mode is suitable for areas with stable power grid.

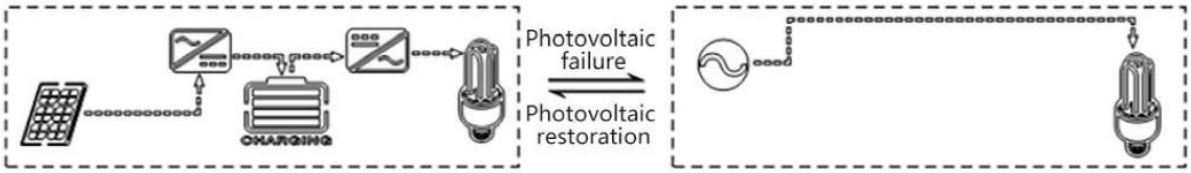

- **Mains supply priority mode:** it only switches to inverter for power supply when mains supply is invalid, equivalent to a backup UPS. Therefore, the mode is applicable to area with unstable power grid.

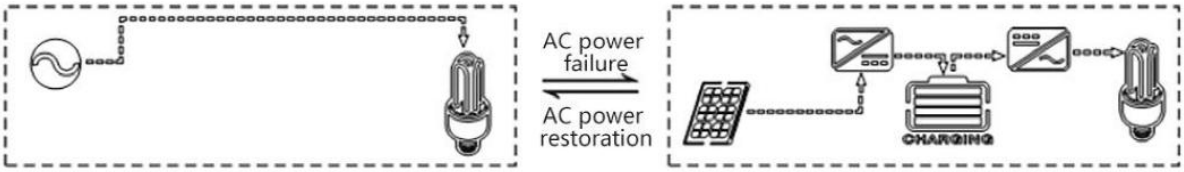

- **Inverter priority mode:** it only switches to mains supply in case of undervoltage of battery. With the mode, DC electric energy is used maximally. Therefore, it is applied to the area with stable power grid.

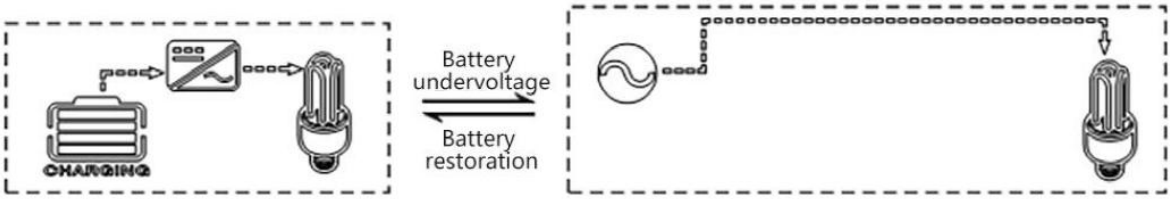

4. Operation Instruction for LCD Screen

4.1 Operation and display panel

4.2 Introduction to operation keys

Function Key	Description
SET	Enter/exit setting menu
UP	Last option

DOWN	Next option
ENT	Confirm/enter option under setting menu

4.3 Introduction to indicator light

Indicator light	Color	Description
AC/INV	Yellow	Constant on: mains supply output
		Flashing: inverter output
CHARGE	Green	Flashing: battery in charge
		Constant on: charge completed
FAULT	Red	Constant on: fault state

4.4 Introduction to LCD screen

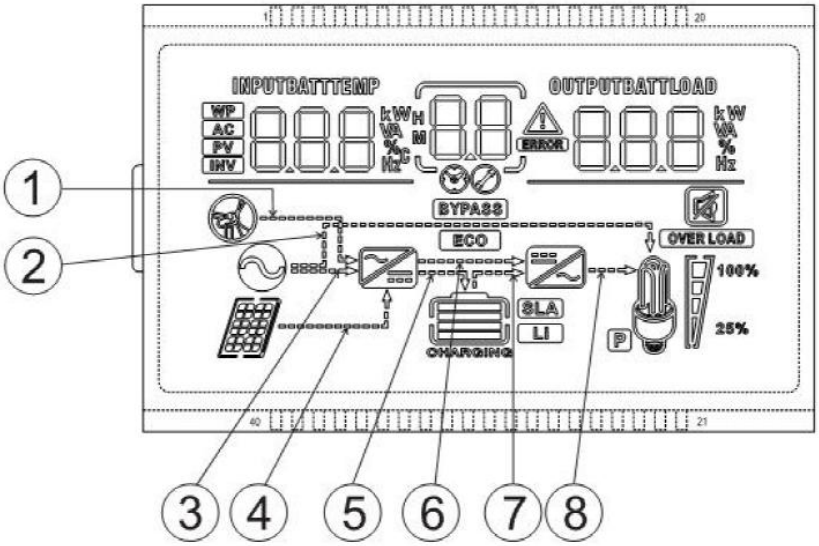

Icon	Function	Icon	Function
	Indicating that AC input end has been connected to power grid		Indicating that inverter circuit is in working.
	Indicates that the AC input mode in APL mode (wide voltage range)	BYPASS	Indicating that the machine is in mains supply bypass work mode

	Indicating that PV input end has been connected to solar battery panel	OVER LOAD	Indicating that AC output is in overload state
	Indicating that machine has been connected to battery, indicating 0%~24% battery remainin capacity indicating 25%~49% battery remaining capacity indicating 50%~74% battery remaining capacity indicating 75%~100% battery remaining capacity		Indicating percentage of AC output load, indicating 0%~24% load percentage, indicating 25%~49% load percentage, indicating 50%~74% load percentage, indicating ≥75% load percentage

Li	Indicating that present battery type of the machine is lithium battery		Indicating that buzzer is not enabled
SLA	Indicating that current battery type of machine is lead-acid battery		Indicating alarm of machine
CHARGING	Indicating that the battery is in charge state.	ERROR	Indicating that the machine is in fault state.
	Indicating that AC/PV charge circuit is in working		Indicating that the machine is in setting mode.
	Indicating that AC output end has AC voltage output		Middle parameter display of screen, 1. In non-setting mode, displaying alarm or fault code; 2. In setting mode, displaying code of parameter item under current setting.
Parameter display at left side of screen: input parameter			
AC	Indicating AC input		
PV	Indicating PV input		
INV	Indicating inverter circuit		
WP	The icon is not displayed		

	Displaying battery voltage, total charge current of battery, charge power of mains supply, AC input voltage, AC input frequency, PV input voltage, temperature of internal radiator, software version
Parameter display at right side of screen: output parameter	
	Indicating output voltage, output current, output active power, output apparent power, battery discharge current, software version; under setting mode, displaying the setting parameter under the parameter item code set currently

Arrow display			
①	The arrow is not displayed	⑤	Indicating charge from charge circuit to battery end
②	Indicating power grid power supply to load	⑥	The arrow is not displayed
③	Indicating power grid power supply to charge circuit	⑦	Indicating power supply from battery end to inverter circuit
④	Indicating PV power supply to charge circuit	⑧	Indicating power supply from inverter circuit to load

Real-time data view method

In LCD main screen, press keys "UP" and "DOWN" to turn page and view different realtime data of the machine.

Page	Left Parameter of Screen	Middle Parameter of Screen	Right Parameter of Screen
1	Battery input voltage	Fault code	Output voltage
2	PV temperature		PV output KW
3	PV input voltage		PV output current
4	Input battery current		Output battery current
5	Input battery KW		Output battery KW
6	AC input frequency		AC output load frequency
7	AC input voltage		AC output load current
8	Input voltage		Output load KVA

9	INV temperature		INV output load KW
10	APP software version		Bootloader software version
11	Model Battery Voltage Rating		Model Output Power Rating
12	Model PV Voltage Rating		Model PV Current Rating

4.5 Setting parameter

Key operation description: to enter setting menu and exit from setting menu, please press key "SET". After entering the setting menu, parameter number 【00】 shall flash. At this time, press keys " UP " and " DOWN " to select the parameter item code to be set. Afterwards, press key " ENT" to enter parameter editing state. At this moment, the parameter value can flash. The parameter values are adjusted through keys "UP" and "DOWN". In the end, press key "ENT" to complete parameter editing and return to parameter selection state.

No. of Parameter	Name of Parameter	Setting Option	Description
00	Exit	[00] ESC	Exit from setting menu
01	Work priority mode	[01] SOL	At photovoltaic priority mode, when the photovoltaics is invalid or the battery values are lower than the parameter 【04】setting value, it shall switch to AC power.
		[01] UTI **default**	At AC priority mode, it switches to inverter only when the AC power is invalid.
		[01] SBU	At inverter priority mode, it switches to AC power only when battery is undervoltage or lower than the setting value of parameter 【04】.
02	Output frequency	[02] 50.0	At bypass self-adaption, it automatically adapts to AC frequency in case of AC power; without AC power, the output frequency can be set via the menu. For 230V machine, it is 50Hz by defaul.
		[02] 60.0	
03	AC input Voltage range	[03] APL	90~280V wide range input AC voltage range of 230V machine
		[03] UPS **default**	170~280V narrow range input AC voltage range of 230V machine

04	Battery to bypass	[04] 44 **default**	When parameter【01】=SOL/SBU, the battery voltage is lower than the set value, the output is switched to mains or generator from battery. The setting range is 44V~52V.
05	Bypass to battery	[05] 57.6V **default**	When parameter【01】=SOL/SBU, battery voltage is higher than the set value, the output is switched to battery from mains or generator at 48V~60V setting range.
06	Charge mode	[06] CSO	For photovoltaics priority charge, the AC charge is started only when photovoltaics is invalid.
		[06] CUB	For AC priority charge, the photovoltaics charge is started only when AC is invalid.
		[06] SNU **default**	In case of mixed charge from photovoltaics and AC power, priority is given to photovoltaic charge. In case of insufficient photovoltaic energy, the AC charge is used for supplement. In case of sufficient photovoltaic charge, stop charge from AC power. Note: photovoltaic charge and AC charge can be performed at the same time only when AC bypass is output under load. When inverter works, only photovoltaic charge can be started.
		[06] OSO	Only photovoltaic charge, no AC charge is started.
07	Maximum Charge current	[07] 60A **default**	Setting range 0~80A;
08	Battery type	[08] USE	For user-defined, all battery parameters can be set.
		[08] SLd	Sealed lead-acid battery, constant voltage charge voltage 57.6V, float charge voltage 55.2V.
		[08] FLd	For vented lead-acid battery, charge voltage at constant voltage is 58.4V and float charge voltage is 55.2V
		[08] GEL **default**	For gel lead-acid battery, charge voltage at constant voltage is 56.8V and float charge voltage is 55.2V.

		[08] L14/L15/L16	Lithium iron phosphate battery L14/L15/L16 corresponds to lithium iron phosphate battery 14 strings/15 strings/16 strings;16 string/15 string/14 string default constant The voltage charging pressure is 56.8V, 53.2V, 49.6V, which are adjustable.
		[08] N13/N14	Ternary lithium battery; which is adjustable.
09	Boost charge voltage	[09] 57.6V **default**	The setting range of boost charge voltage is 48V~58.4V with 0.4V step. It is valid in case of a self-defined or a lithium battery.
10	Boost charge maximum time	[10] 120 **default**	Boost maximum charge time setting means setting of maximum charge time of voltage when the voltage reaches parameter 【09】 from 5min~900min at 5-minute step. It is valid in case of a self-defined or a lithium battery.
11	Float voltage	[11] 55.2V **default**	48V~58.4V setting range of float voltage at 0.4V step is valid in case of a self-defined battery.
12	Overdischarge voltage	[12] 42V **default**	So as to overdischarge voltage, when the battery voltage is lower than the judgement point, after delaying for the parameter 【13】 setting time, turn off the inverter output. 40V~48V voltage setting range at 0.4V step is valid in case of a self-defined battery and lithium battery.
No. of Parameter	**Name of Parameter**	**Setting Option**	**Description**
13	Overdischarge delay time	[13] 5S **default**	So as to overdischarge delay time, when the battery voltage is lower than parameter 【12】, the inverter output is turned off after delaying the time set with the parameter. 5S~50S setting range at 5S step is valid in case of a self-defined and lithium battery.
14	Battery undervoltage alarm point	[14] 44V **default**	So as to battery undervoltage alarm point, when the battery voltage is lower than the judgement point, an undervoltage alarm is given out and no turnoff is output. 40V~52V setting range at 0.4V step is valid in case of a self-defined and lithium battery.
15	Battery discharge limiting voltage	[15] 40V **default**	So as to battery discharge limiting voltage, when the battery voltage is lower than the judgement point, the output is turned off immediately. 40V~52V setting range at 0.4V

			step is valid in case of a self-defined and lithium battery.
16	Equalizing charge	[16] DIS	No equalizing charge is permitted.
		[16] ENA **default**	When equalizing charge is enabled, only vented lead-acid battery and sealed lead-acid are valid.
17	Equalizing Charge voltage	[17] 58.4V **default**	So as to equalizing charge voltage, 48V~58.4V setting range at 0.4V step is valid in case of a vented lead-acid battery and sealed lead-acid battery.
18	Equalizing charge time	[18] 120 **default**	So as to equalizing charge time, 5min~900min setting range at 5min step is valid in case of a vented lead-acid battery and sealed lead-acid battery.
19	Equalizing charge delay	[19] 120 **default**	For equalizing charge delay, 5min~900min setting range at 5min step is valid in case of a vented lead-acid battery and sealed lead-acid battery.
20	Equalizing charge derating time	[20] 30 **default**	For equalizing charge derating time, 0~30days setting range at 1-day step is valid in case of a vented lead-acid battery and sealed lead-acid battery.
21	Equalizing charge enabling	[21] ENA	Start equalizing charge immediately.
		[21] DIS **default**	Stop equalizing charge immediatel.
No. of Parameter	**Name of Parameter**	**Setting Option**	**Description**
22	Energy saving mode	[22] DIS **default**	No energy-saving mode
		[22] ENA	After enabling the energy-saving mode, in case of empty or small load, the output is turned off after output delaying of inverter for a certain period of time. After the rocker switch is pressed to "OFF" state and then to "ON" state, the inverter restore the output.
23	Automatic restart after overload	[23] DIS	When the automatic restart after overload is disabled, if the output is turned off upon overload, the machine shall not restore turnon.
		[23] ENA **default**	When the automatic restart after overload is enabled, if the output is turned off upon overload, output is restarted by the mains after 3min delay. The machine shall not restarted after 5 times of restarts.

24	Automatic restart after overtemperature	[24] DIS	When automatic restart after overtemperature is disabled, if the output machine is turned off upon overtemperature, no output is turned on.
		[24] ENA **default**	When automatic restart after overtemperature is enabled, if the output is turned off upon overtemperature, the output can be turned on after the machine cools down.
25	Buzzer alarm	[25] DIS	Disabling alarm
		[25] ENA **default**	Enabling alarm
26	Mode conversion reminding	[26] DIS	No alarm prompt in case of any change in main input source
		[26] ENA **default**	Alarm prompt is enabled if state of main input source is changed.
27	Inverter overload to bypass	[27] DIS	No automatic switching to AC power in case of inverter overload
		[27] ENA **default**	Automatic switching to AC power in case of inverter overload
28	AC maximum charge current	[28] 60A **default**	Setting range 0~60A
29	Split Phase	[29] DIS **default**	Supply for industrial frequency transformer (disabled)
		[29] ENA	Supply for industrial frequency transformer (enabled)
No. of Parameter	**Name of Parameter**	**Setting Option**	**Description**
30	RS485 Address setting	[30] 1 **default**	RS485 communication address setting range 1 ~ 254, (refer to Number [32] is valid when set as SLA)
35	Battery lowvoltage recovery	[35] 52V **default**	Setting range 44V~58.4V
37	Battery fully charged recovery point	[37] 52V **default**	After the battery is fully charged, it needs to be lower than this set voltage before it can be recharged
38	AC output Voltage setting	[38] 230Vac **default**	Settable： (200/208/220/240Vac)

4.6 Battery type parameters

For Lead-acid Battery :

Battery type / Parameters	Sealed lead acid battery (SLD)	Colloidal lead acid battery (GEL)	Vented lead acid battery (FLD)	User-defined (USE)
Overvoltage disconnection voltage	60V	60V	60V	60V
Equalizing charge voltage	58.4V	56.8V	59.2V	40 ~ 60V (Adjustable)
Boost charge voltage	57.6V	56.8V	58.4V	40 ~ 60V (Adjustable)
Floating charge voltage	55.2V	55.2V	55.2V	40 ~ 60V (Adjustable)
Undervoltage alarm voltage	44V	44V	44V	40 ~ 60V (Adjustable)
Low voltage disconnection voltage	42V	42V	42V	40 ~ 60V (Adjustable)
Discharge limit voltage	40V	40V	40V	40 ~ 60V (Adjustable)

Over-discharge delay time	5s	5s	5s	1 ~ 30s (Adjustable)
Equalizing charge duration	120 minutes	-	120 minutes	0 ~ 600 minutes (Adjustable)
Equalizing charge interval	30 days	-	30 days	0 ~ 250 days (Adjustable)
Boost charge duration	120 minutes	120 minutes	120 minutes	10 ~ 600 minutes (Adjustable)

For Lithium Battery :

Battery type / Parameters	**Ternary lithium battery (N13)**	**Ternary lithium battery (N14)**	**Lithium iron phosphate battery (L16)**	**Lithium iron phosphate battery (L15)**	**Lithium iron phosphate battery (L14)**	**User-defined (USE)**
Overvoltage disconnection voltage	60V	60V	60V	60V	60V	60V
Equalizing charge voltage	-	-	-	-	-	40 ~ 60V (Adjustable)
Boost charge voltage	53.2V (Adjustable)	57.6V (Adjustable)	56.8V (Adjustable)	53.2V (Adjustable)	49.2V (Adjustable)	40 ~ 60V (Adjustable)
Floating charge voltage	53.2V (Adjustable)	57.6V (Adjustable)	56.8V (Adjustable)	53.2V (Adjustable)	49.2V (Adjustable)	40 ~ 60V (Adjustable)
Undervoltage alarm voltage	43.6V (Adjustable)	46.8V (Adjustable)	49.6V (Adjustable)	46.4V (Adjustable)	43.2V (Adjustable)	40 ~ 60V (Adjustable)
Low voltage disconnection voltage	38.8V (Adjustable)	42V (Adjustable)	48.8V (Adjustable)	45.6V (Adjustable)	42V (Adjustable)	40 ~ 60V (Adjustable)

Discharge limit voltage	36.4V	39.2V	46.4V	43.6V	40.8V	40 ~ 60V (Adjustable)
Over-discharge delay time	30s (Adjustable)	30s (Adjustable)	30s (Adjustable)	30s (Adjustable)	30s (Adjustable)	1 ~ 30s (Adjustable)

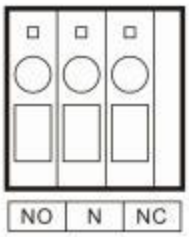

Equalizing charge duration	-	-	-	-	-	0 ~ 600 minutes (Adjustable)
Equalizing charge interval	-	-	-	-	-	0 ~ 250 days (Adjustable)
Boost charge duration	120 minutes (Adjustable)	120 minutes (Adjustable)	120 minutes (Adjustable)	120 minutes (Adjustable)	120 minutes (Adjustable)	10 ~ 600 minutes (Adjustable)

5.Other Function

5.1 Dry node function

Working principle: this dry node can control the switch of diesel generator to charge the battery.

① Under normal conditions, in this terminal, NC-N point is closed and NO-N point is opened;

② when the battery voltage reaches the low-voltage disconnection voltage point, the coil of the relay is energized and NO-N point is closed and NC-N point opened. At this time, NO-N point can drive resistive loads 125VAC/1A, 230VAC/1A and 30VDC/1A.

5.2 RS485 communication function

There are two communication ports RS485-1 and RS485-2 and also two functions:

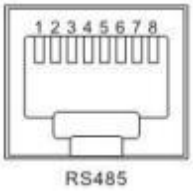

① RS485 communication with lithium battery BMS can be conducted directly through this port RS485-2 (need to be customized);

② RS485-1 is connected to the selected RS485 to WiFi /GPRS communication module independently developed by our company After the selected module is equipped, the reverse control Solar charge inverter of our company can be connected through mobile APP, and the operating parameters and status of the reverse control Solar charge inverter can be checked through the mobile APP.

③ Such as shown in the figure: pin 1 is 5V power supply; pin 2 is GND, pin 7 is RS485-A and pin 8 is RS485-B.

5.3 USB communication function

This port is a USB communication port, which can be used for USB communication with the selected upper computer software of our company (Need to apply for). To use this port, the corresponding "USB to serial port chip CH340T driver" should be installed in the computer.

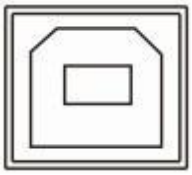

6.Protection

6.1 Protection function

No.	Protection Function	Note
1	Current limiting protection	When the charge current of the configured PV array exceeds the rated current of PV, it will be charged at the rated current.
2	Anti-reverse charge protection at night	At night, because the battery voltage is greater than that of the PV module, the battery shall be protected against discharge through the PV module.

3	AC input over- voltage protection	When the AC voltage exceeds 280V (230V model), the AC charge will be stopped and converted to inverter for output.
4	AC input under- voltage protection	When the AC voltage is lower than 170V (230V model), the AC charge will be stopped and converted to inverter for output.
5	Battery overvoltage protection	When the battery voltage reaches the overvoltage breaking voltage point, charge from PV and AC power to the battery shall be automatically stopped to prevent the battery from being damaged due to overcharge.
6	Battery low- voltage protection	When the battery voltage reaches the low-voltage breaking voltage point, the discharge to the battery will automatically stopped to prevent the battery from damage owing to overdischarge.
7	Load output short circuit protection	In case of short-circuit fault at the load output end, the output of AC voltage can be turned off immediately and then restored 1 minute later. After trying for 3 times, the output load end is still in short circuit state, it is required to eliminate the short circuit fault of the load at first, and then turn on the machine again to restore normal output.
8	Radiator overtemperature protection	In case of excessive internal temperature, the Solar charge inverter shall stop charge and discharge; after the temperature returns to normal state, the Solar charge inverter shall restore charge and discharge.
9	Overload protection	There is output within 3 minutes after overload protection. The output is turned off in case of 5 times of continuous overload until the machine is turned on again. Specific overload grade and duration are shown in the technical parameter able after the manual.
10	AC reverse flowing protection	Prevent AC power inverted from battery inverting against reverse flowing into bypass AC input.
11	Bypass overcurrent protection	Built-in AC input overcurrent protection breaker.

6.2 Meaning of fault code

Fault Code	Fault Name	Affecting output or not	Note
【01】	BatVoltLow	Yes	Battery undervoltage alarm
【02】	BatOverCurrSw	Yes	Average overcurrent software protectionforbattery discharge
【03】	BatOpen	Yes	No connection alarm of battery
【04】	BatLowEod	Yes	Stop discharge alarm for battery undervoltage
【05】	BatOverCurrHw	Yes	Battery overcurrent hardware protection
【06】	BatOverVolt	Yes	Charge overvoltage protection

【07】	BusOverVoltHw	Yes	Bus overvoltage hardware protection
【08】	BusOverVoltSw	Yes	Bus overvoltage software protection
【09】	PV VoltHigh	No	PV overvoltage protection
【10】	PV OCSw	No	PV overcurrent software protection
【11】	PV OCHw	No	PV overcurrent hardware protection
【12】	bLineLoss	No	AC power failure
【13】	OverloadBypass	Yes	Bypass overload protection
【14】	OverloadInverter	Yes	Inverter overload protection
【15】	AcOverCurrHw	Yes	Inverter overcurrent hardware protection
【16】	-	-	-
【17】	InvShort	Yes	Inverter short-circuit protection
【18】	-	-	-
【19】	OverTemperMppt	No	PV radiator overtemperature protection
【20】	OverTemperInv	Yes	Overtemperature protection of inverter radiator
【21】	FanFail	Yes	Fan fault
【22】	EEPROM	Yes	Memory fault
【23】	ModelNumErr	Yes	Inaccurate model setting
【26】	RlyShort	Yes	Inverted AC Output Backfills to Bypass AC Input
【29】	BusVoltLow	Yes	Bus undervoltage protection

6.3 Some fault troubleshooting

Fault	Solving Measures
No display on screen	Check whether the battery air switch or PV air switch is closed; whether the switch is in "on" state; press any key on the screen to exit from the screen sleep mode.
Charge battery overvoltage protection	Measure whether the battery voltage exceeds 60V, and disconnect the photovoltaic array air switch and the AC air switch.
Battery undervoltage protection	After the battery charge restores to be above low-voltage disconnection recovery voltage.
Fan fault	Check if the fan doesn't work or if it's blocked by something else.

Radiator overtemperature protection	When the device cools below the overtemperature recovery temperature, it shall restore to normal charge and discharge control.
Bypass overload protection, inverting overload protection	① Decrease consumer; ② Restart Solar charge inverter and the load output is restored.
Inverting short-circuit protection	Carefully check load connection condition, clear short- circuit fault point; After power on again, the load output is restored.
PV overvoltage	Check whether PV input voltage exceeds maximum allowable input voltage with a multimeter.
No connection alarm of battery	Check whether the battery is not disconnected or whether the breaker at the battery side is not closed.

7.System Maintenance

- **In order to maintain the optimum and permanent operation performance, it is suggested to check the following items semiannually.**

1. Confirm that the air flow around the Solar charge inverter will not be blocked. In addition, remove any dirt or debris from the radiator.
2. Check whether the insulation of all exposed wires is damaged due to sun exposure, friction with other objects around, dry rot, insect or rat damage, etc. If necessary, it is required to repair or replace the wires.
3. Verify that the indication and display are consistent with the operation of the device. Please pay attention to any fault or error display and take corrective measures if necessary.

4. Check all terminals for corrosion,insulation damage,high temperature or burning/discoloration sign, and tighten the terminal screws.
5. Check for dirt, nesting insects and corrosion phenomenon and clean as required.
6. If the arrester has failed, replace the failed arrester in time to protect the Solar charge inverter and other user device against lightning damage.

Warning: Danger of electric shock! To perform above operations, make sure that all the power supplies of the Solar charge inverter have been broken and all the capacitor electricity has been discharged. Afterwards, corresponding inspection or operation can be performed!

➢ **We are not responsible for any following damage:**

① Damage caused by improper use or use in inappropriate place.

② Open-circuit voltage of photovoltaic module exceeds maximum allowable voltage.

③ The damage caused by the operation ambient temperature beyond the limited operation temperature range.

④ Personally take apart and maintain the Solar charge inverter.

⑤ Damage caused by force majeure: damage caused by transportation and handling of the Solar charge inverter.

8. Technical Parameter

Model	**ISolar-SMX-II-5.6KW**
AC mode	
Rated input voltage	220/230Vac
Input voltage range	(170Vac~280Vac) ±2% (90Vac-280Vac) ±2%
Frequency	50Hz/ 60Hz (auto-sensing)
Frequency range	47±0.3Hz ~ 55±0.3Hz (50Hz); 57±0.3Hz ~ 65±0.3Hz (60Hz);

Overload/short- circuit protection	Breaker
Efficiency	>95%
Conversion time (Bypass and inverting)	10ms (Typical value)
AC reverse flowing protection	yes
Maximum bypass overload current	40A
Inverting mode	
Output voltage waveform	Pure sine wave
Rated output power (VA)	5600(4870/5060/5350/5600)
Rated output power (W)	5600(4870/5060/5350/5600)
Power factor	1
Rated output voltage (Vac)	230Vac(200/208/220/240Vac Settable)
Output voltage error	±5%
Output frequency range (Hz)	50Hz ± 0.3Hz 60Hz ± 0.3Hz
Efficiency	>90%
Overload protection	(102%<load<125%) ±10%: reporting error and turn off the output after 5 minutes; (125%<load<150%) ±10%: reporting error and turn off the output after 10 seconds; Load>150% ±10%: reporting error and turn off the output after 5 seconds;
Peak power	10000VA
Loaded motor capacity	4HP
Output short-circuit protection	Breaker
Specification of bypass breaker	40A
Rated battery input voltage	48V (minimum start voltage 44V)
Battery voltage range	undervoltage alarm/turnoff voltage/overvoltage alarm/overvoltage restoration...settable LCD screen
Power saving mode	Load ≤25W
AC charge	
Battery type	Lead acid or lithium battery
Maximum charge current	60A
Charge current error	± 5Adc
Charge voltage range	40–60Vdc
Short-circuit protection	Breaker and blown fuse
Breaker specification	40A
Overcharge protection	Turn off charge after 1min alarm
Solar charge	

Maximum PV open-circuit voltage	500Vdc
PV operation voltage range	120-500Vdc
MPPT voltage range	120-450Vdc
Battery voltage range	40-60Vdc
Maximum input power	6000W
Charge current range of solar energy (settable)	0-80A
Charge short-circuit protection	Blown fuse
Wiring protection	Inverse wiring protection
Authentication specification	
Specification authentication	CE(IEC 62109-1)
EMC authentication grade	EN61000
Operation temperature range	-15°C to 55°C
Storage temperature range	-25°C ~ 60°C
Humidity range	5% to 95% (three-proof paint protection)
Noise	≤60dB
Thermal dissipation	Forced cooling with adjustable air speed
Communication interface	USB/RS485 (WiFi/GPRS)/dry node control
Dimension (L*W*D)	426mm*322mm*126mm
Weight (kg)	10.9