PET DRINKING FOUNTAIN

OvalF_SS06

T Spout

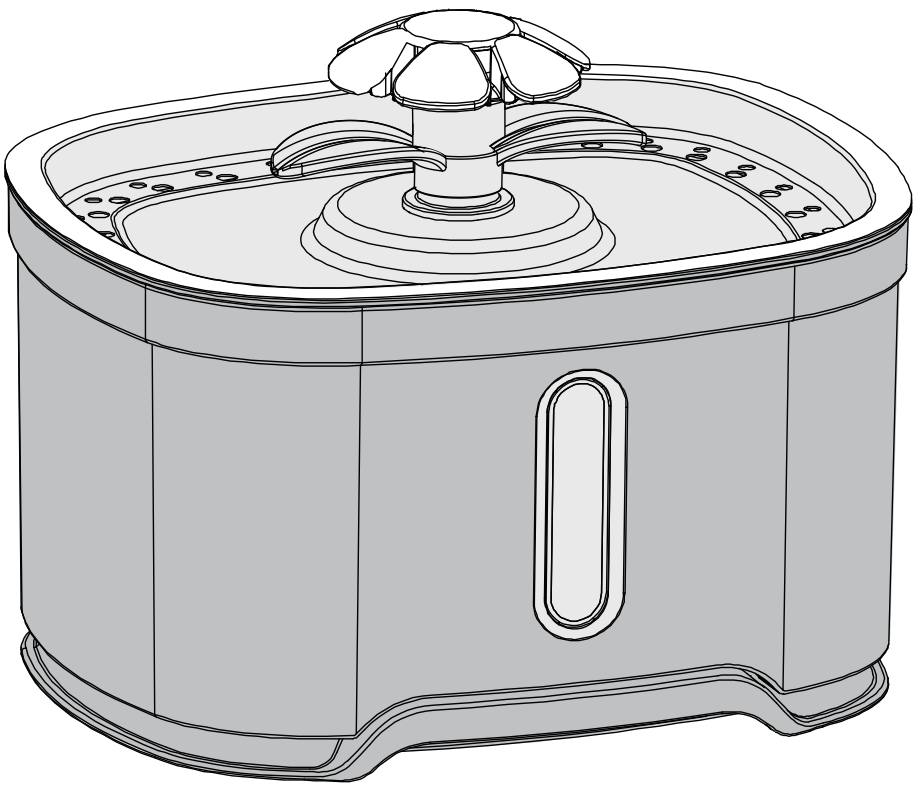

- **LED LIGHT**
- **STAINLESS STEEL TOP TRAY**
- **AUTO SHUT WATER PUMP (OPTIONAL ITEM)**

Part Name

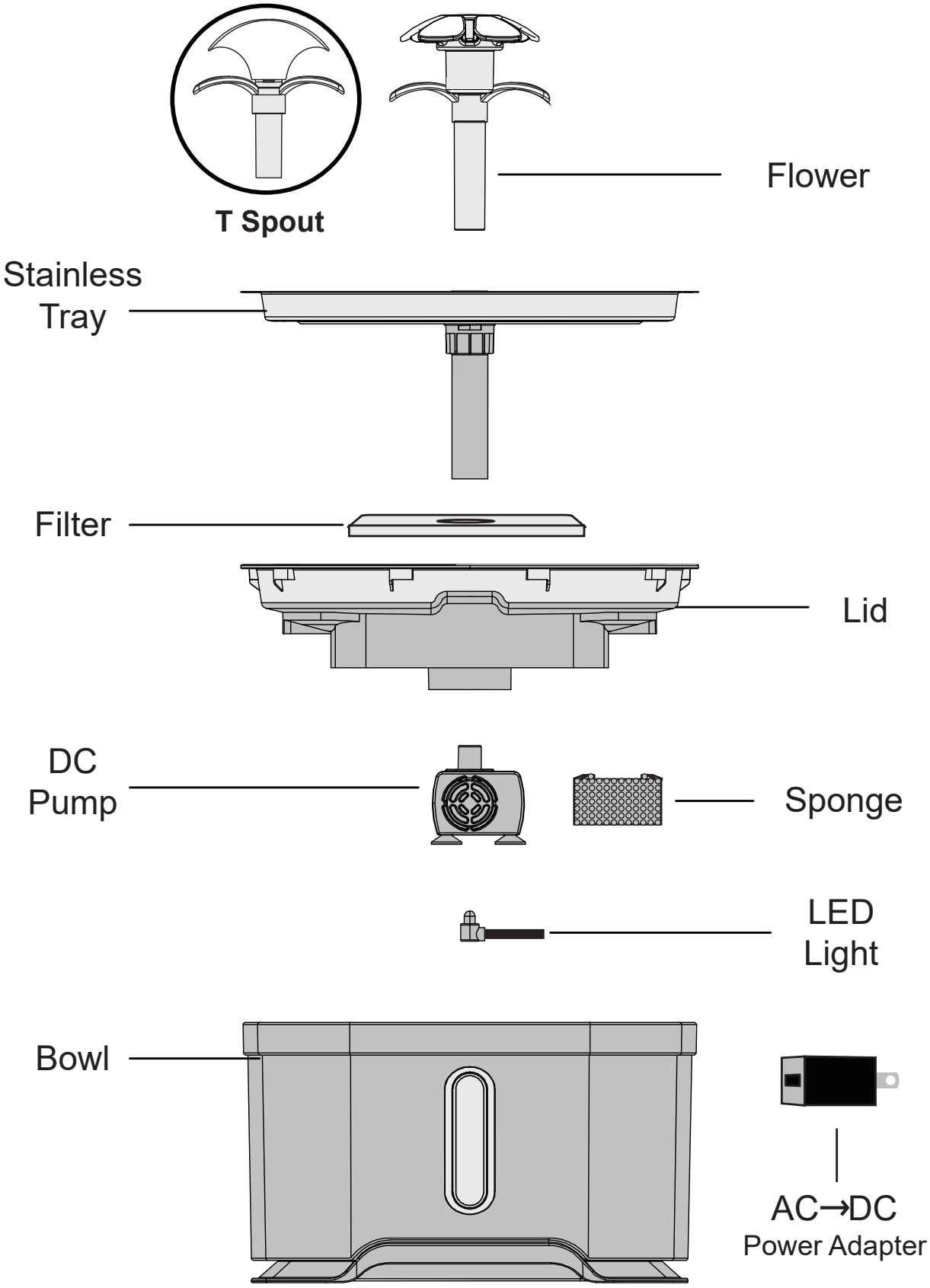
T Spout
Flower
Stainless Tray
Filter
Lid
DC Pump
Sponge
LED Light
Bowl
AC→DC
Power Adapter

Quick Start Guide (1)

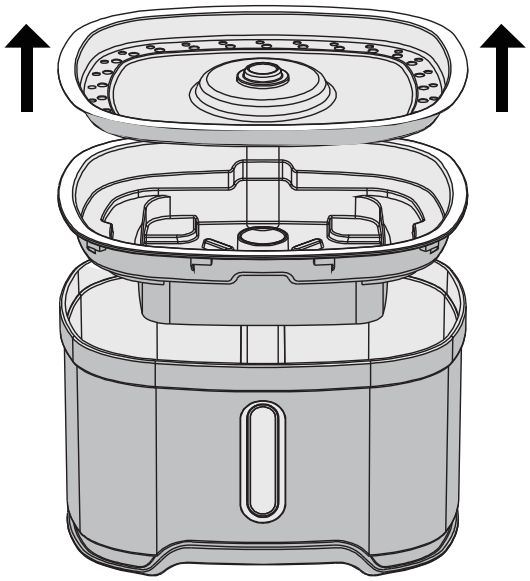

Remove all the parts from the bowl. Clean and rinse inside of bowl thoroughiy with plain water.

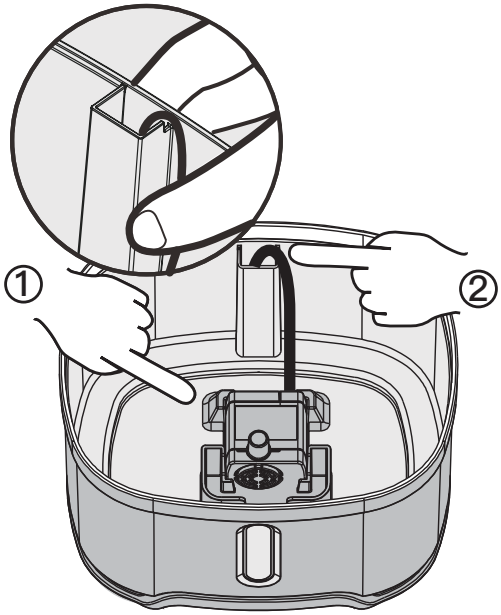

Place the pump inslsde the square indentation firstly, then extend wire down through tube and out the bottom hole.

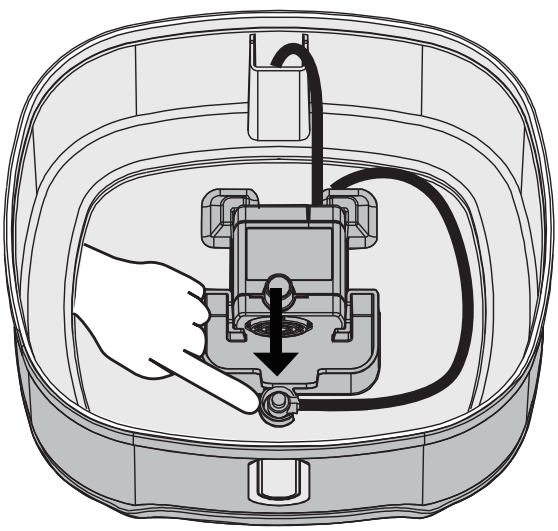

Place the LED light in front of the pump around the bottom of the bowl.

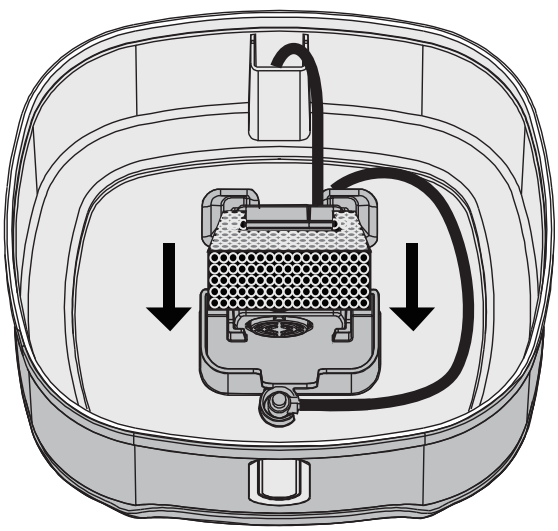

Place the sponge inside small indentation in front of pump.

Quick Start Guide (2)

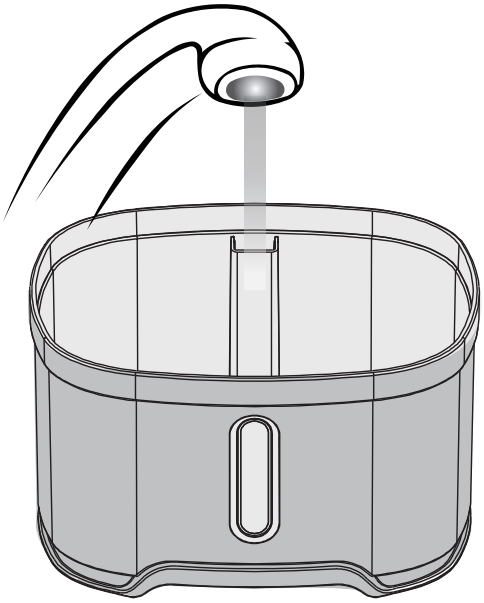

Adding water as needed. Do not exceed the maximum water level (bottom surface of the filter).

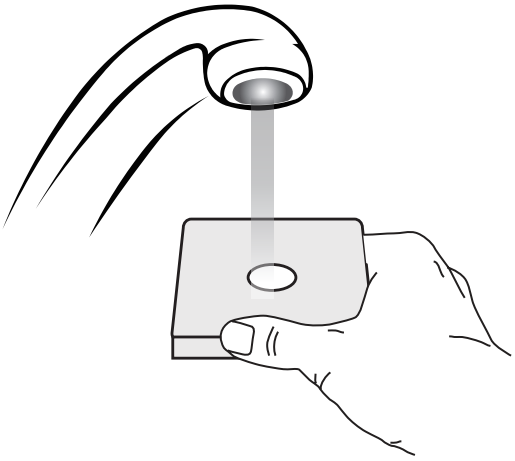

Adding water as needed. Do not exceed the maximum water level (bottom surface of the filter).

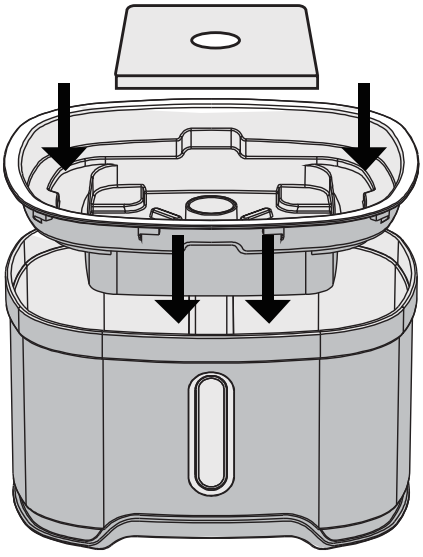

Place the lid on the bowl. Place the filter on top of the lid and press down firmly.

T Spout

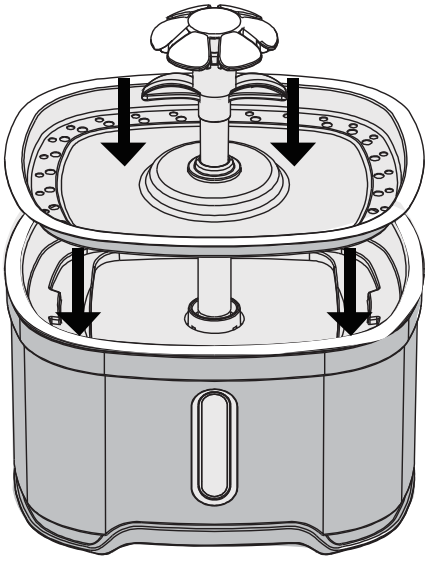

Place the tube of the tray through the hole of the lid to make sure the tube connected with the pump outlet. Then insert the flower into the tube.

Plug in and Use

❶ Connect the inline plug and plug the adaptor into electrical outlet.

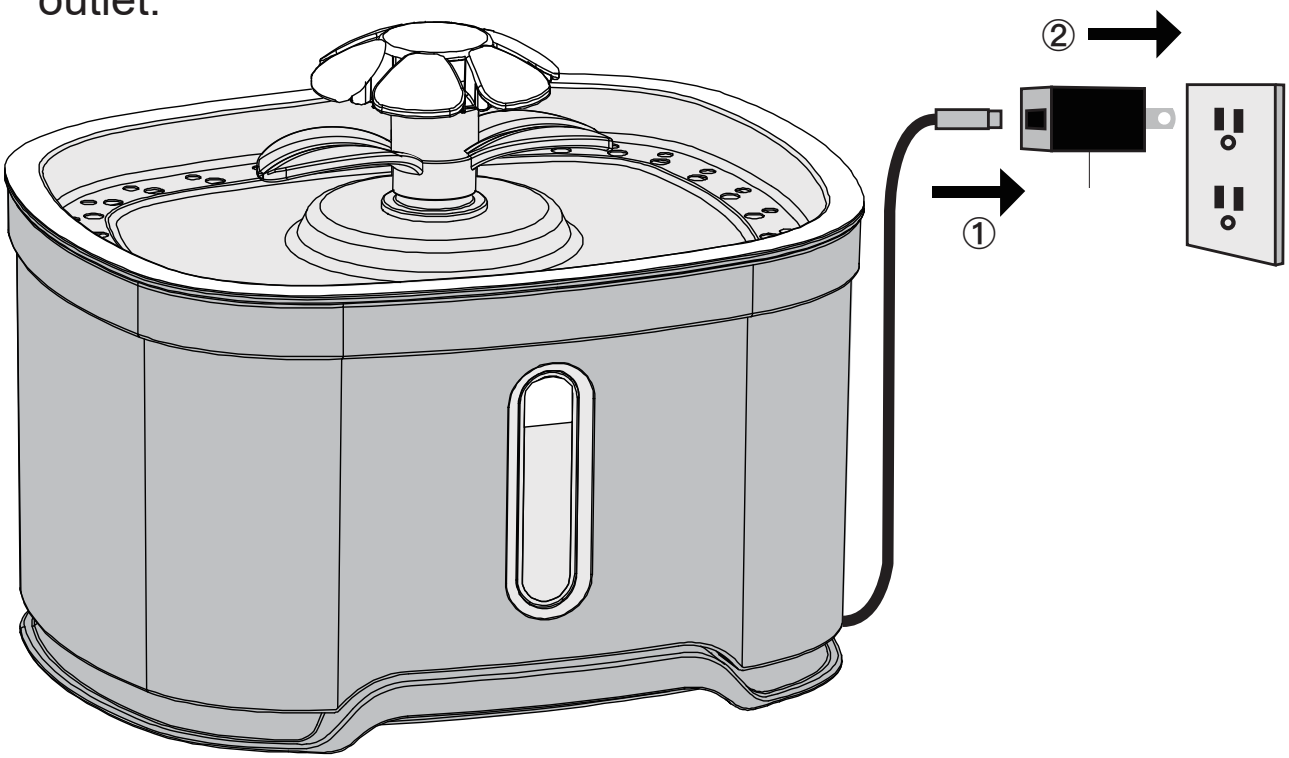

❷ Different Settings for Water Flow:

A) Remove the flower to create a gentle bubbling water surface.

B) Insert the T spout to create new streams.

T Spout

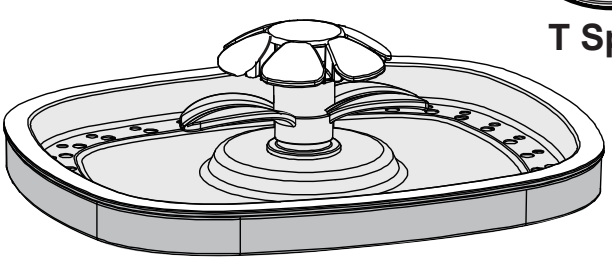

A)

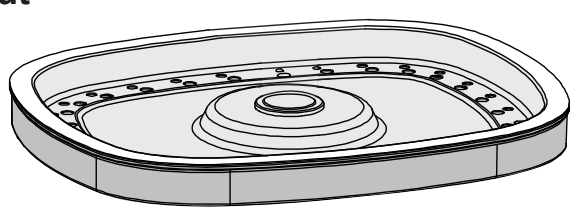

B)

Specification

Prouct Name	Elliptical Pet Drinking Fountain
Input	100V~240V ~50/60 Hz
Output	5V ⎓ 1A
Pump	Ultra Low Noice DC Pump
Power Consumption	2W
Prouct Dimensions	L210mm*W175mm*H125mm
Prouct Weight	0.8KG
Cord Length	1.8m
Housing Material	High Glossing Anti-bacterial PP Resin
Filter System	High Iodine Value Coconut Shell Activated Carbon & Ion Exchange Resin
Capacity	2.5L(84Oz)
Compliance	Pump: CE Power Adatper: c UL us or other country certificated Adapter
ECO	RoHS 2002/95/EC FC

Pump Maintenance

Cleaning the pump is essential to the longevity of the fountain.
Clean the pump every 2 weeks.

1. Remove the Pump Cover.
2. Remove the Impeller Cap by placing your fingernail underneath the small lip as pictured to the right.
3. Remove the Impeller and clean the parts with soap and warm water.

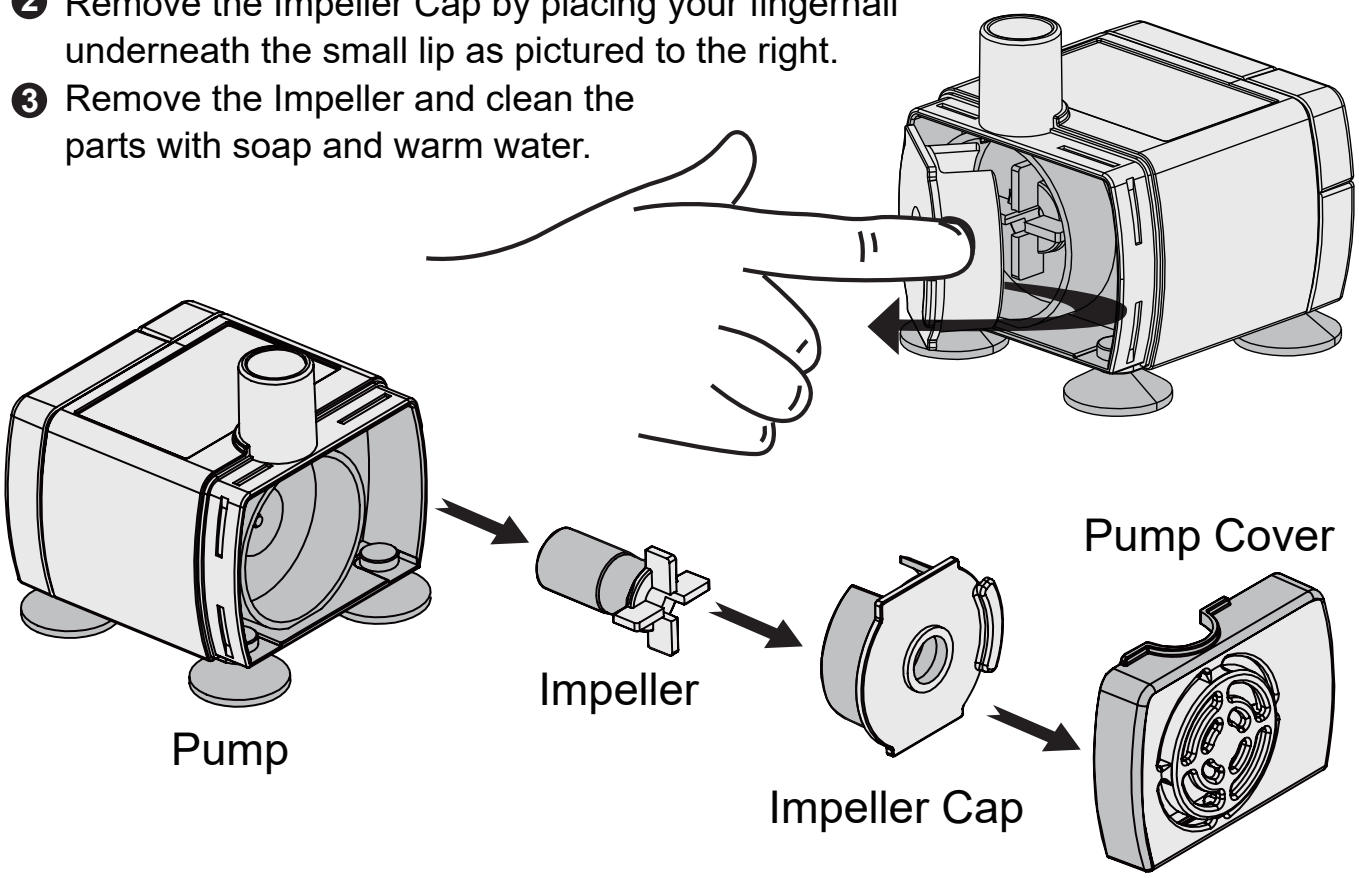

Fountain Maintenance

1. Power off before cleaning.
2. Clean fountain with water or a foam with neutral detergent.
3. Foam filter can only be cleaned with water. Detergent is not allowed.
4. Hot water, gasoline, alcohol or organic solvent is not allowed to be used to clean the fountain.
5. Dishwasher safe, excluding the pump.

Q&A

How frequently do I need to change the fliter?

The charcoal filter and foam filter should be changed every 2 to 4 weeks, depending on the number of pets using the fountain. Having more pets that use the fountain will increase the saliva content and debris in the water, so the filter will need tobe changed more frequently.

How often should I clean the fountain?

It is common for some residual charcoal dust to seep from the filter. This is perfectly normal and not harmful to your pet in any manner. To help prevent the charcoal dust from shedding, rinse the filter thoroughly under running water before placing insider the fountain.

Why am I finding small black particles in my pet's fountain?

Fountain should be cleaned at least every 2 weeks. Please clean it once a week if you in hard water.

How long will the fountain pump last?

The fountain runs on long life pump. The pump normally lasts between 2.5~4 years(>20,000 hours). If the pump has been regular use fou approximately this time period, it may need replacing.

How long will the fountain pump last?

Fountain runs on a super low power pump with a power adapter. The power consumption for total unit is about 2.0 Watts so the total power consumption is about 1.5 kWh per month or 18kWh per year.