Naked O3 Lite \ Ultra Air unit

Installation guide

安装指南

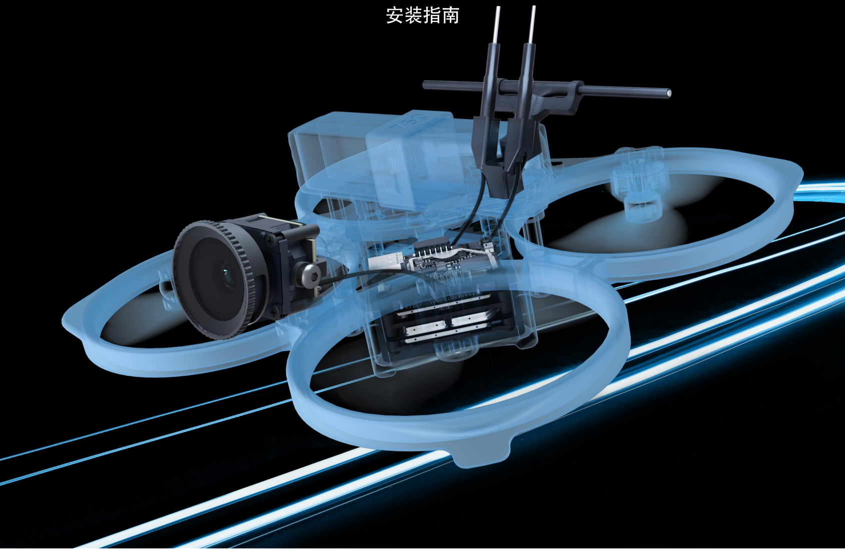

Table of Contents

目录

1. Specifications
2. Accessories List
3. DJI O3 Disassembly Diagram
4. Upgrade Kits Installation Diagram
5. Precautions for Use

1. 规格参数
2. Naked O3 分离示意图
3. 完整配件清单
4. Upgrade Kits 安装示意图
5. 使用注意事项

Specifications

规格参数

Product Name 产品名称	Original O3	O3 LITE	O3 Ultra
Camera size 相机尺寸	21.2*20*17.9mm	16.5*18*14mm	
Camera weight 相机重量	9g	5g	
VTX size VTX 尺寸	32.6*30.6*14.8mm	29.8*28.8*13.3mm	
VTX weight VTX 重量	27.8g	18.2g	13.3g
Total weight (excluding antenna) 总重量（不含天线）	36.8g	23.2g	18.3g
Memory space 内存空间	20G		
SD card support SD卡支持	YES 是		NO 否
Filter model 滤镜型号	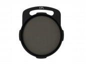	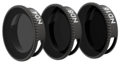	
antenna 配套天线	original antenna	original/Brass Antenna	
High temperature warning time(Cold start) 高温警告时间	10+min	3.30min	2.20min
Input voltage 输入电压	7V-26V		
Communication frequency 通讯频率	2.4G / 5.8G		
Transmit power 发射功率	FCC:<33dBm CE:<14dBm SRRC:<30dBm		

Environmental temperature 环境温度	-10°C~40°C（14°F~104°F）

Diagram of Naked O3 Separation

Naked O3 分离示意图

1. To disassemble the camera, it is necessary to remove the cable fixing rubber to take out the cable.

1. 摄像头拆卸, 需要移除线缆固定橡胶才能取出线缆.

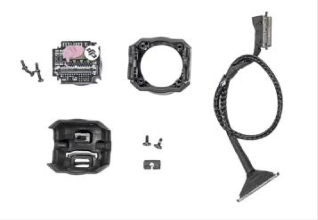

2. Remove the four bottom screws of the VTX module.

移除VTX模块底部螺丝.

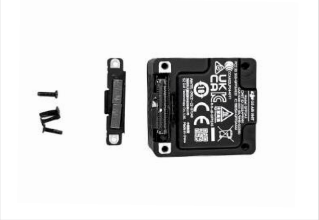

3. Remove the four top screws of the VTX module.

3. 移除VTX模块顶部螺丝.

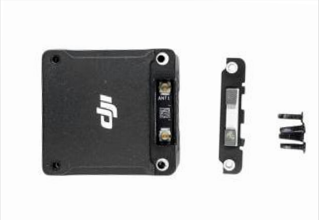

4. Remove the glue on the internal connector, then separate the module.

4. 把内部连接器上的胶水移除， 然后分离模块.

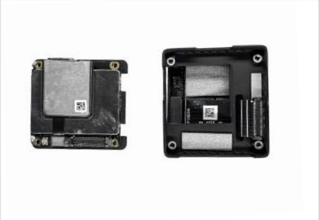

5. Flip over and separate the other half of the module.

5. 分离另一半模块.

6、 Use PCB cleaner to remove the thermal silicone on the surface.

6. 使用PCB清洗剂去除表面的散热硅胶.

In the box

包装说明

KIT

2*M1.6X4

6*M1.6X5

4*M1.2X3

4*M2X4

NAKED O3 AIR UNIT Coaxial Cable Locker

1*Cam Cable Fix

NAKED O3 AIR UNIT ANT IPX Locker
NAKED O3 AIR UNIT ANT IPX Locker

2*IPX Antenna Fix

1*Naked O3 Clear UV

Cable Locker Position
FLYWOO NAKED O3 AIR UNIT KITS

1*Center Fix

2*5.8G Light 5.8G
3dBi Brass Antenna

FLYWOO O3 CAM

1*O3 Cam Fix

LITE

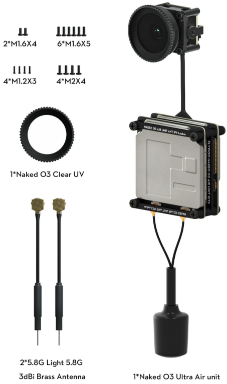
2*M1.6X4
6*M1.6X5
4*M1.2X3
4*M2X4
1*Naked O3 Clear UV
2*5.8G Light 5.8G
3dBi Brass Antenna
1*Naked O3 Ultra Air unit

ULTRA

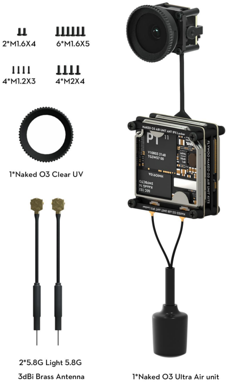
2*M1.6X4
6*M1.6X5
4*M1.2X3
4*M2X4
1*Naked O3 Clear UV
2*5.8G Light 5.8G
3dBi Brass Antenna
1*Naked O3 Ultra Air unit

Upgrade Kits

安装示意图

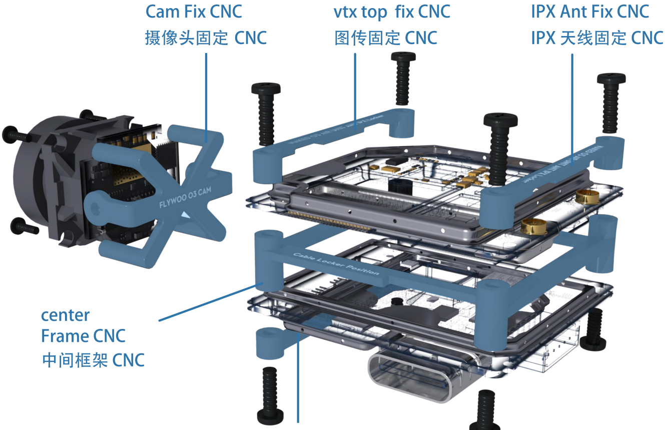
Cam Fix CNC
摄像头固定 CNC
vtx top fix CNC
图传固定 CNC
IPX Ant Fix CNC
IPX 天线固定 CNC
center
Frame CNC
中间框架 CNC
FLYWOO O3 CAM
Cable Locker Position

Cam Cable
Fix CNC
摄像头同轴线固定 CNC

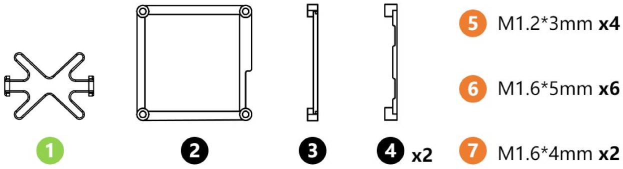
1
2
3
4 x2
5 M1.2*3mm x4
6 M1.6*5mm x6
7 M1.6*4mm x2

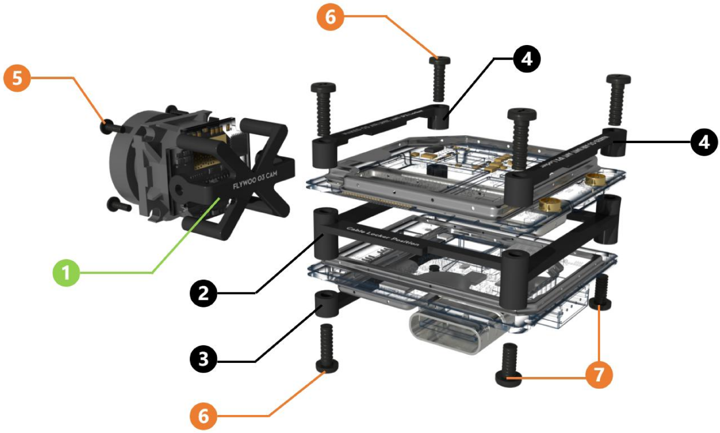
6
4
5
4
FLYWOO O3 CAM
Cable Locker Position
1
2
3
7
6

Notice

注意事项

1、Please handle the installation and disassembly of the O3 shell carefully and use the standard screws provided.
2、When removing the camera coaxial cable, please remove the silicone fixing ring first.
3、The CNC fixing kit has a specific direction and orientation. Please follow the installation guide.
4、When upgrading the firmware, please use a fan for cooling to prevent overheating and interruption of the upgrade process.
5、Please unlock and take off as soon as possible after powering on. If the O3 is stationary for too long, it will prompt that the chip is overheating, which will cause recording failure.
6、If prompted to calibrate the gyroscope for the camera, please connect the O3 to USB and power supply, and calibrate the gyroscope according to the DJI software prompt

1、安装和拆卸O3外壳请仔细操作，使用配备的标准螺丝
2、拆卸摄像头同轴线时，需要移除硅胶固定圈后取出
3、CNC固定套件区分方向和正反面，请根据安装指南操作
4、升级固件时请使用风扇冷却，防止过热中断升级
5、通电后请尽快解锁起飞，静止时间过久会提示芯片过热，导致无法录像
6、如果提示摄像头需要校准陀螺仪，请将O3连接USB并供电，根据DJI软件提示校准陀螺仪